Suggested Problems

Dynamics

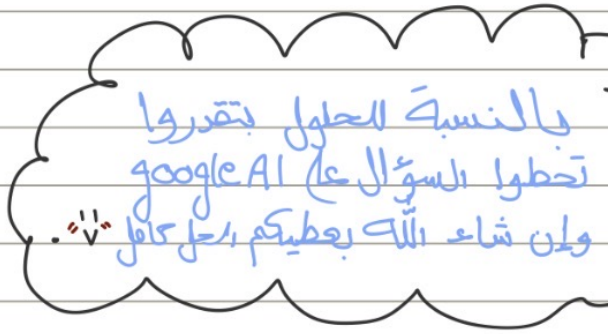

12–18. The acceleration of a rocket traveling upward is given by $a = (6 + 0.02s)\ \text{m/s}^2$, where s is in meters. Determine the time needed for the rocket to reach an altitude of $s = 100$ m. Initially, $v = 0$ and $s = 0$ when $t = 0$.

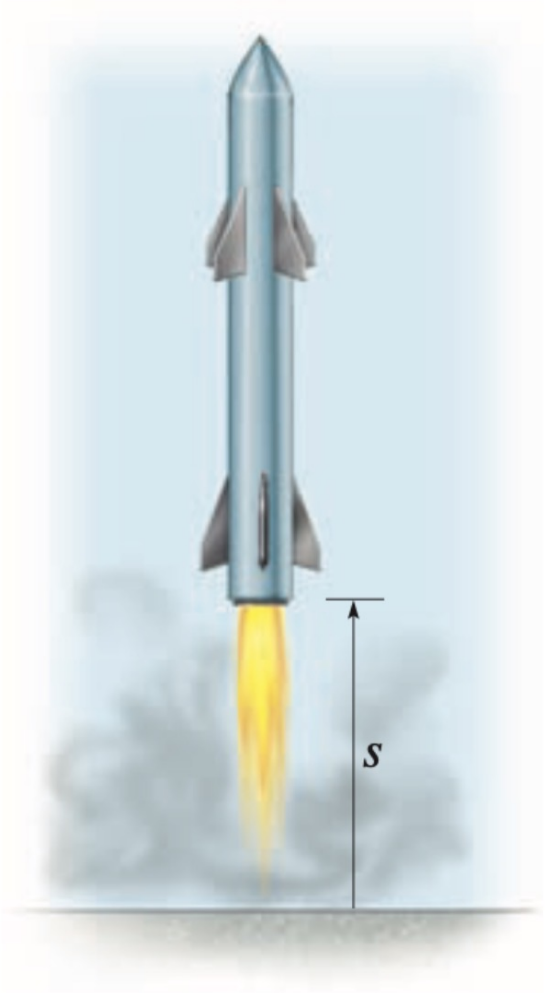

Prob. 12–18

12–47. A two-stage rocket is fired vertically from rest at $s = 0$ with the acceleration as shown. After 30 s the first stage, A, burns out and the second stage, B, ignites. Plot the v–t and s–t graphs which describe the motion of the second stage for $0 \leq t \leq 60$ s.

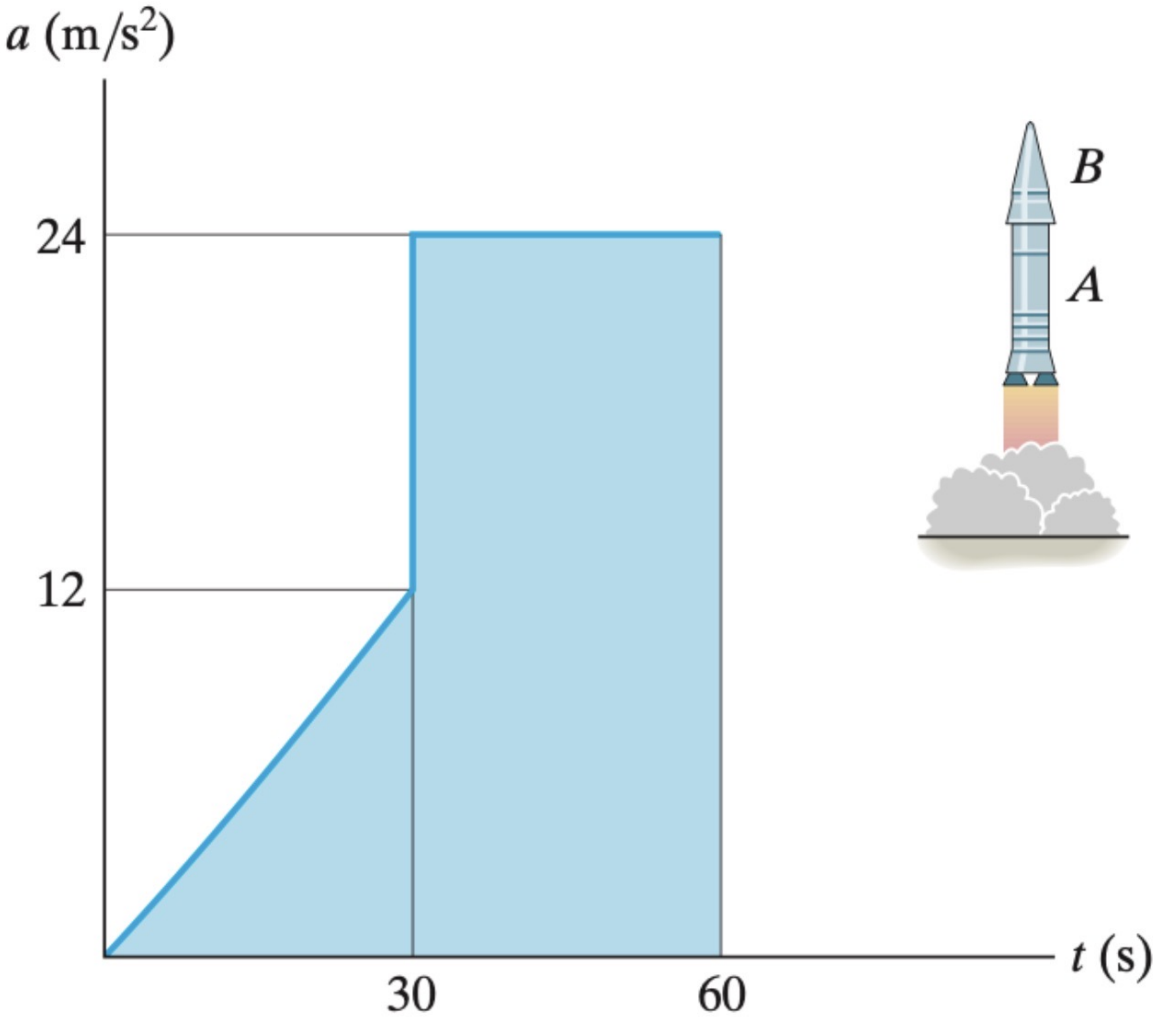

Prob. 12–47

12–53. A motorcycle starts from rest at $s = 0$ and travels along a straight road with the speed shown by the v–t graph. Determine the motorcycle's acceleration and position when $t = 8$ s and $t = 12$ s.

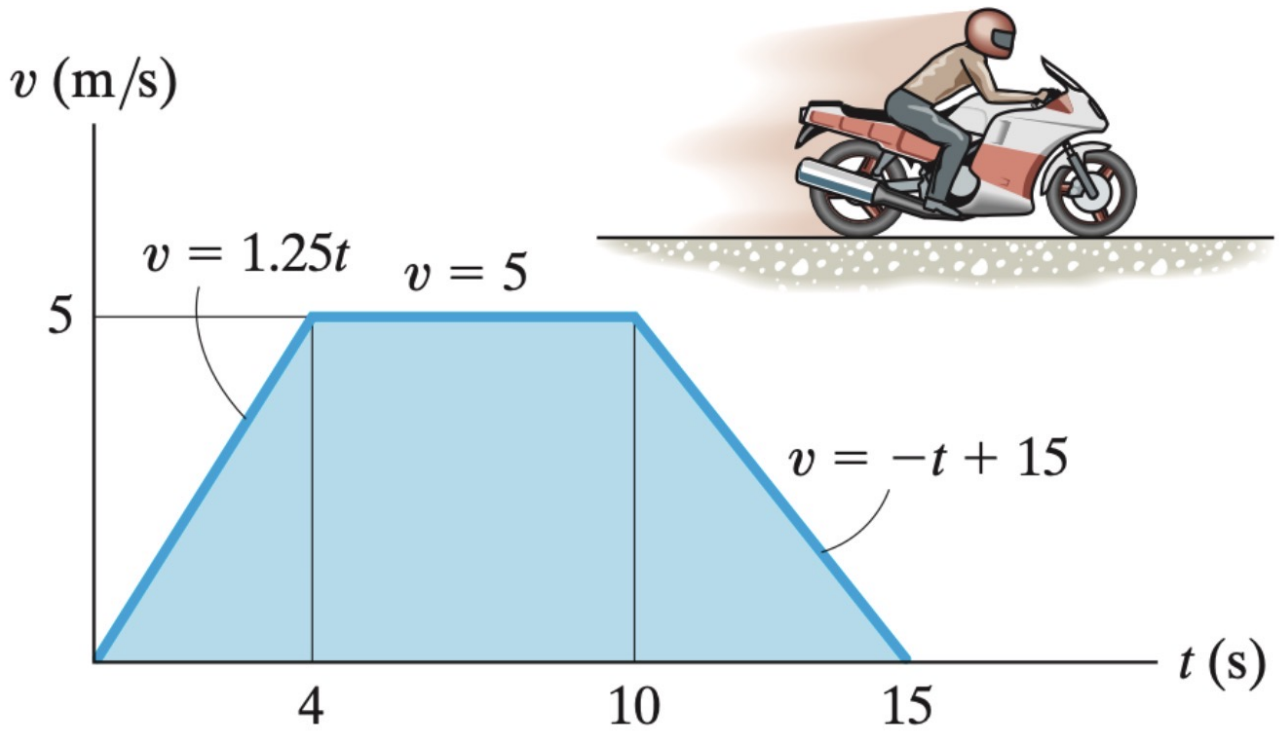

Probs. 12–52/53

12–79. The particle travels along the path defined by the parabola $y = 0.5x^2$. If the component of velocity along the x axis is $v_x = (5t)$ ft/s, where t is in seconds, determine the particle's distance from the origin O and the magnitude of its acceleration when $t = 1$ s. When $t = 0$, $x = 0$, $y = 0$.

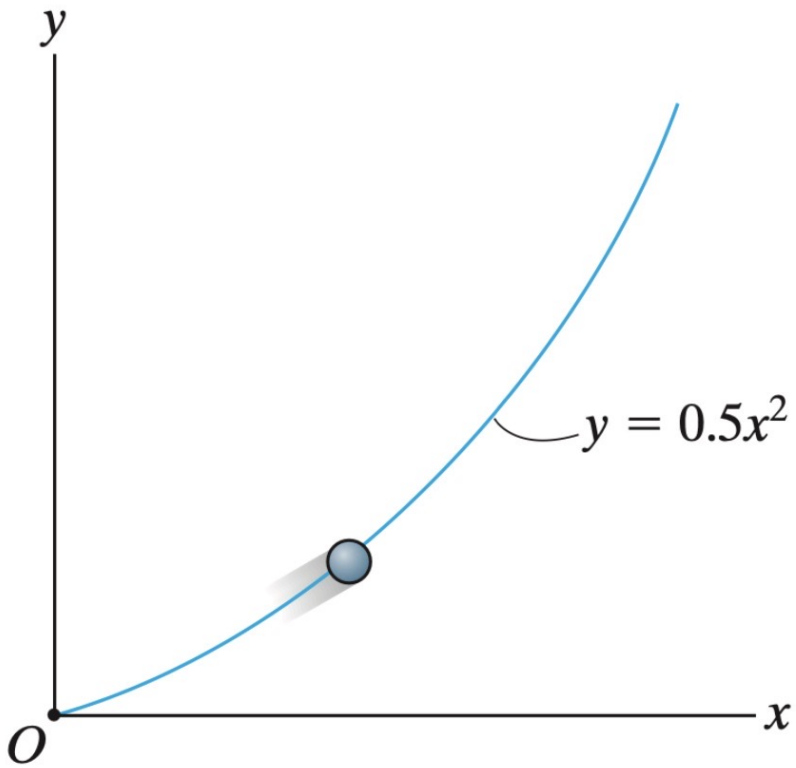

Prob. 12–79

12–119. The satellite S travels around the earth in a circular path with a constant speed of 20 Mm/h. If the acceleration is 2.5 m/s^2, determine the altitude h. Assume the earth's diameter to be 12 713 km.

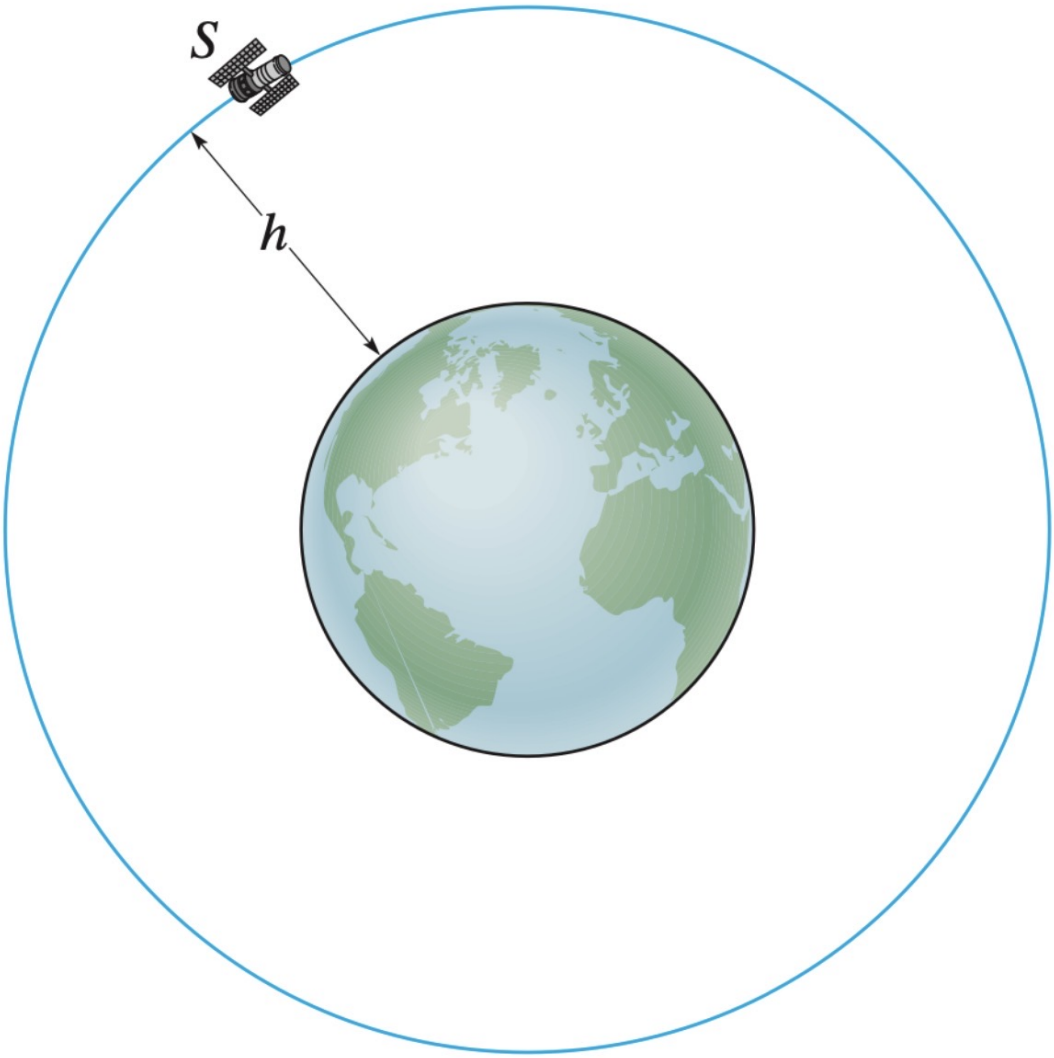

Prob. 12–119

16–17. A motor gives gear A an angular acceleration of $\alpha_A = (2 + 0.006\ \theta^2)\ \text{rad/s}^2$, where θ is in radians. If this gear is initially turning at $\omega_A = 15\ \text{rad/s}$, determine the angular velocity of gear B after A undergoes an angular displacement of 10 rev.

16–18. A motor gives gear A an angular acceleration of $\alpha_A = (2t^3)\ \text{rad/s}^2$, where t is in seconds. If this gear is initially turning at $\omega_A = 15\ \text{rad/s}$, determine the angular velocity of gear B when $t = 3\ \text{s}$.

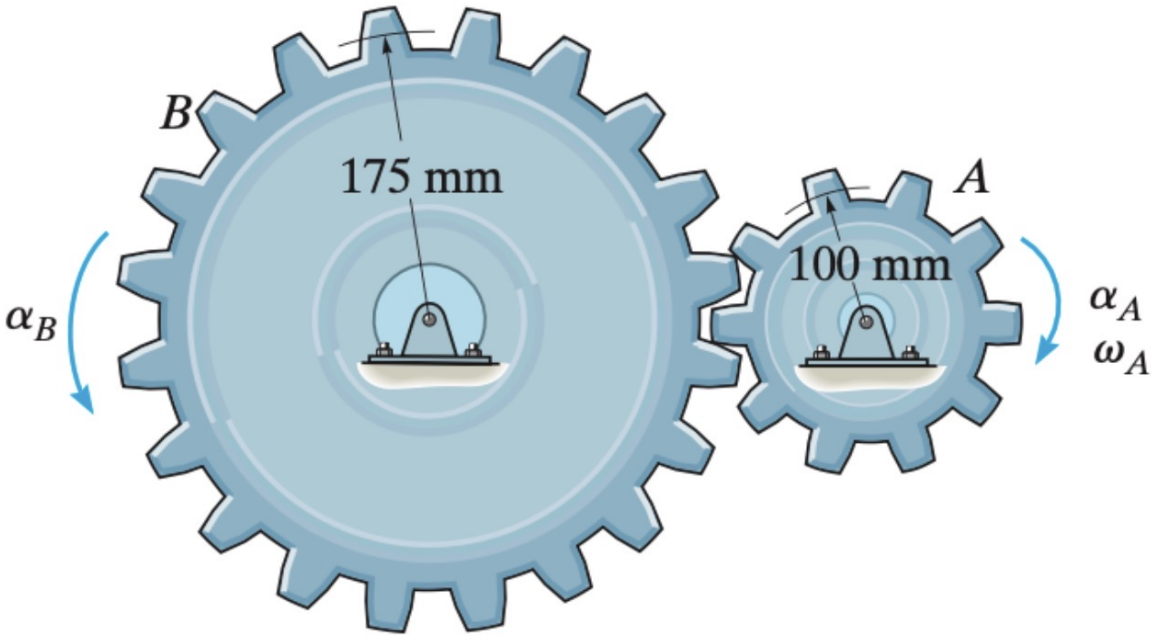

Probs. 16–17/18

16–22. If the motor turns gear A with an angular acceleration of $\alpha_A = 2\ \text{rad/s}^2$ when the angular velocity is $\omega_A = 20\ \text{rad/s}$, determine the angular acceleration and angular velocity of gear D.

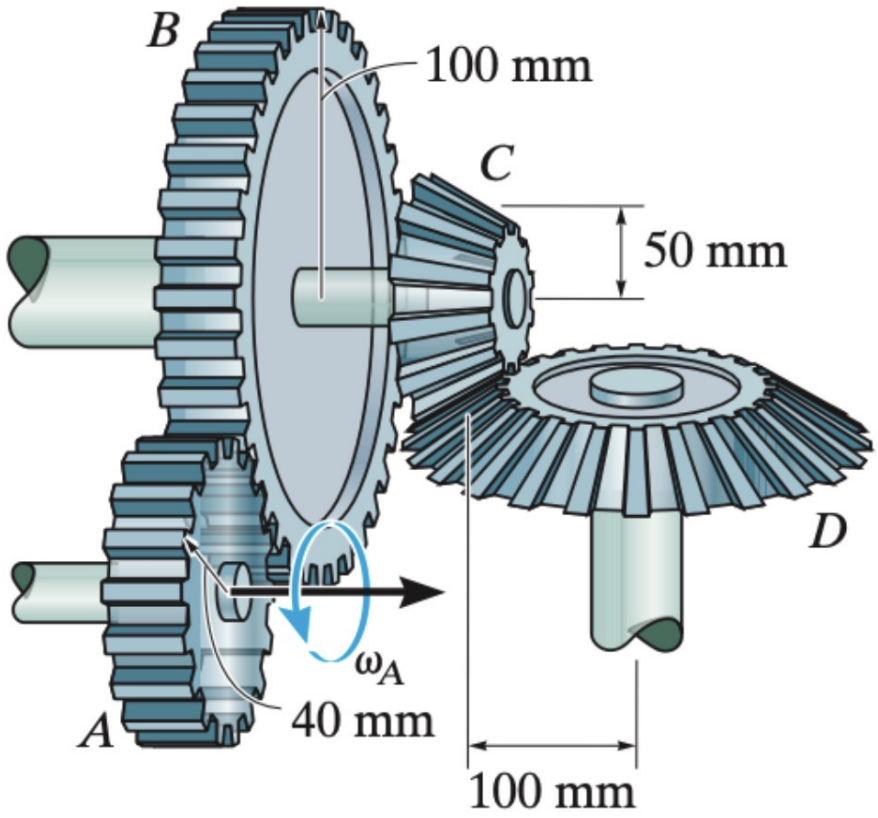

Prob. 16–22

***16–32.** The driving belt is twisted so that pulley B rotates in the opposite direction to that of drive wheel A. If A has a constant angular acceleration of $\alpha_A = 30\ \text{rad/s}^2$, determine the tangential and normal components of acceleration of a point located at the rim of B when $t = 3\ \text{s}$, starting from rest.

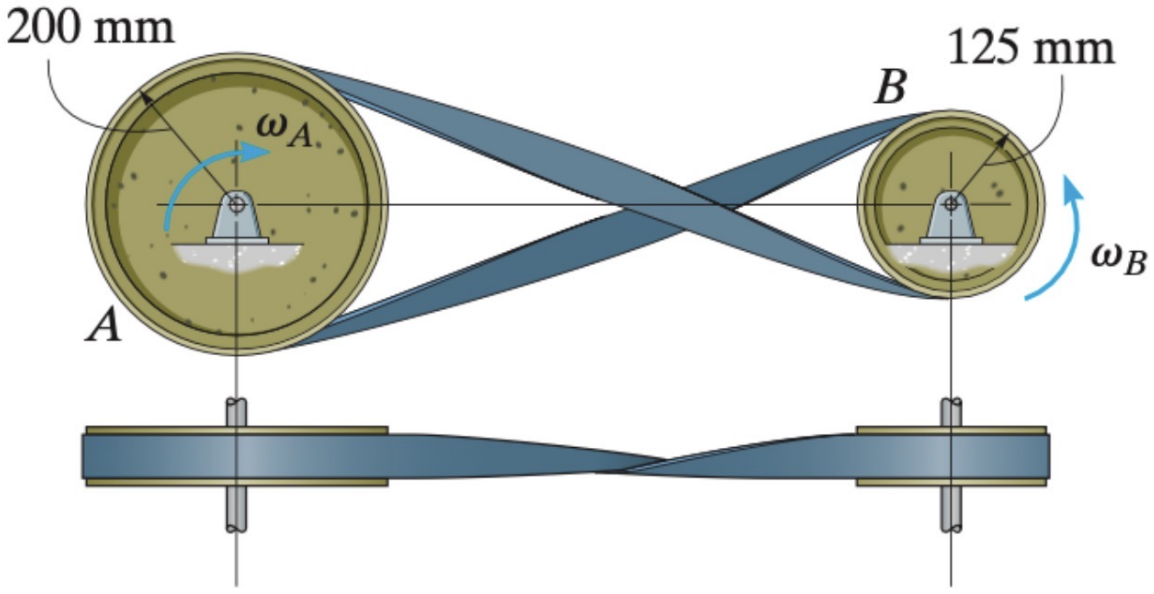

Prob. 16–32

13–5. If blocks A and B of mass 10 kg and 6 kg respectively, are placed on the inclined plane and released, determine the force developed in the link. The coefficients of kinetic friction between the blocks and the inclined plane are $\mu_A = 0.1$ and $\mu_B = 0.3$. Neglect the mass of the link.

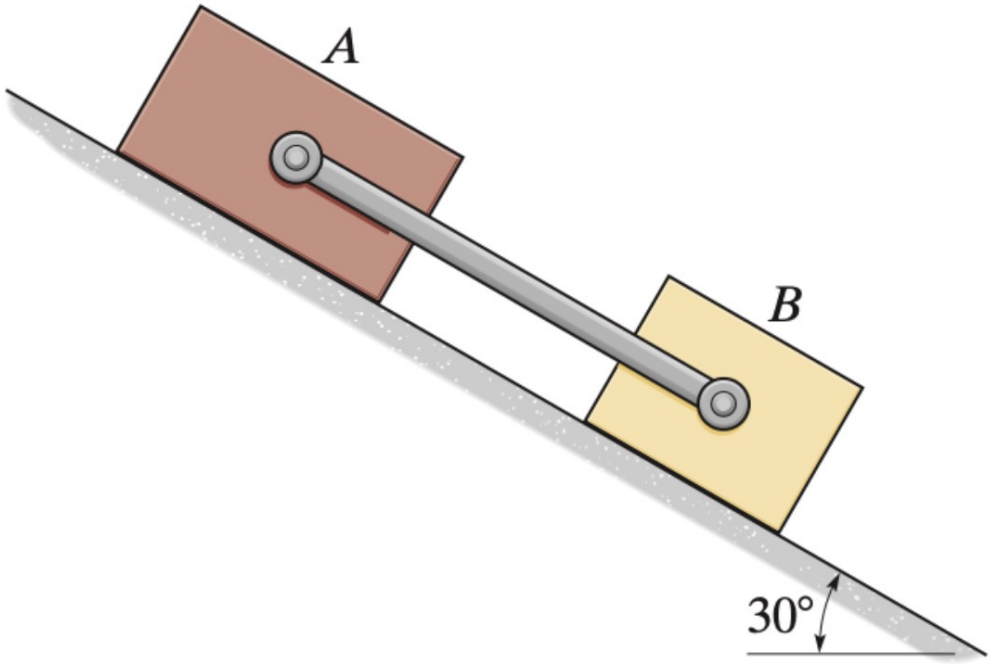

Prob. 13–5

*13–8. The speed of the 3500-lb sports car is plotted over the 30-s time period. Plot the variation of the traction force **F** needed to cause the motion.

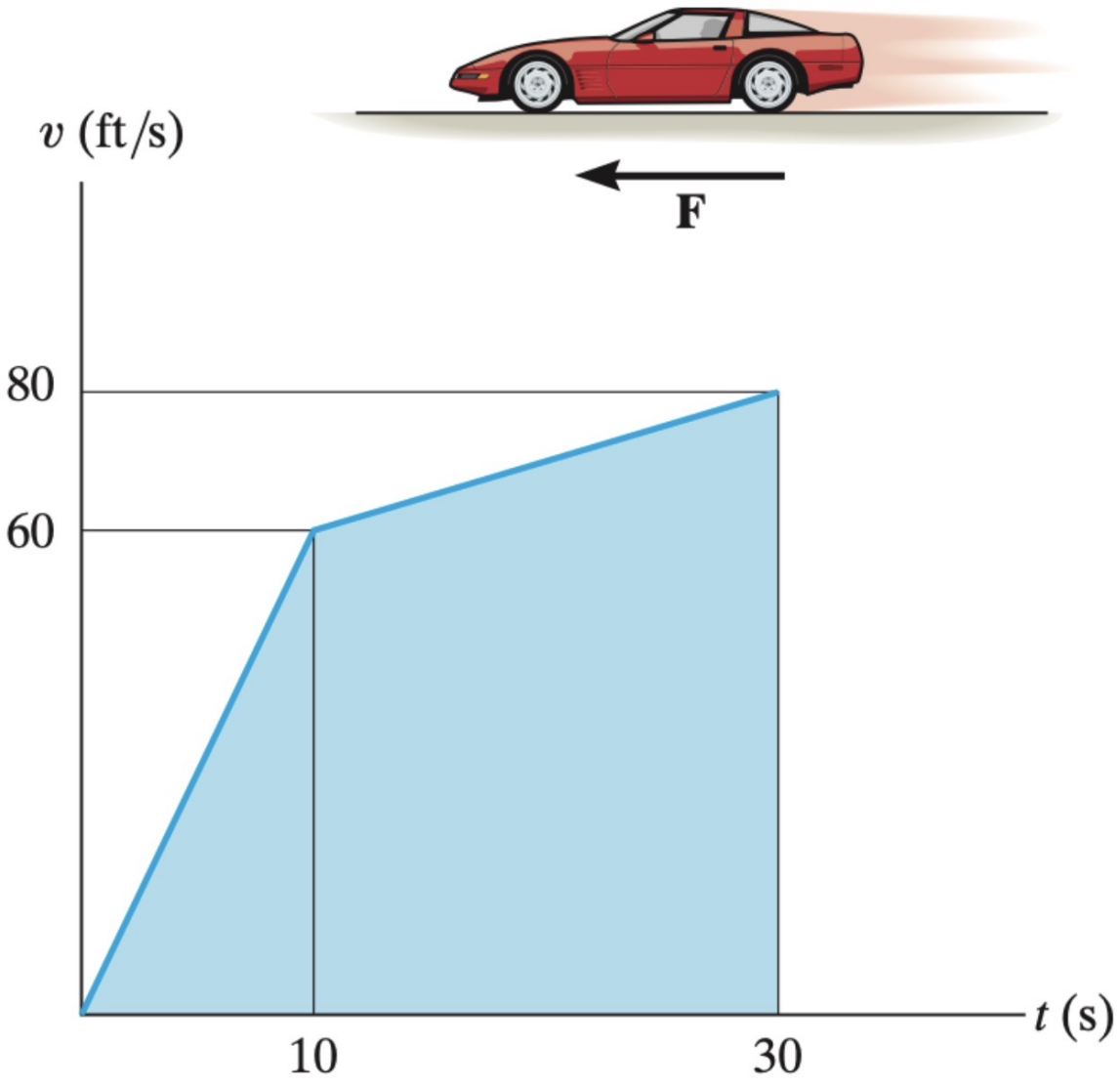

Prob. 13–8

13–15. The motor lifts the 50-kg crate with an acceleration of 6 m/s^2. Determine the components of force reaction and the couple moment at the fixed support A.

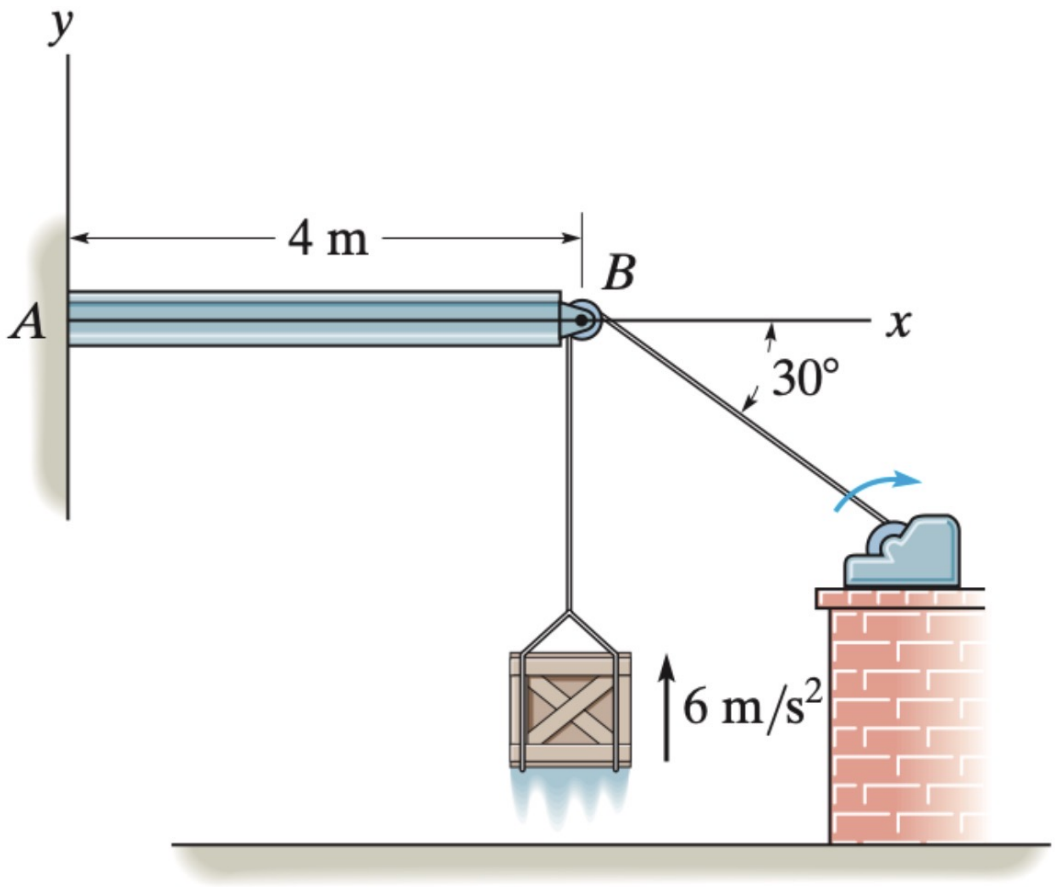

Prob. 13–15

13–75. The box has a mass m and slides down the smooth chute having the shape of a parabola. If it has an initial velocity of v_0 at the origin determine its velocity as a function of x. Also, what is the normal force on the box, and the tangential acceleration as a function of x?

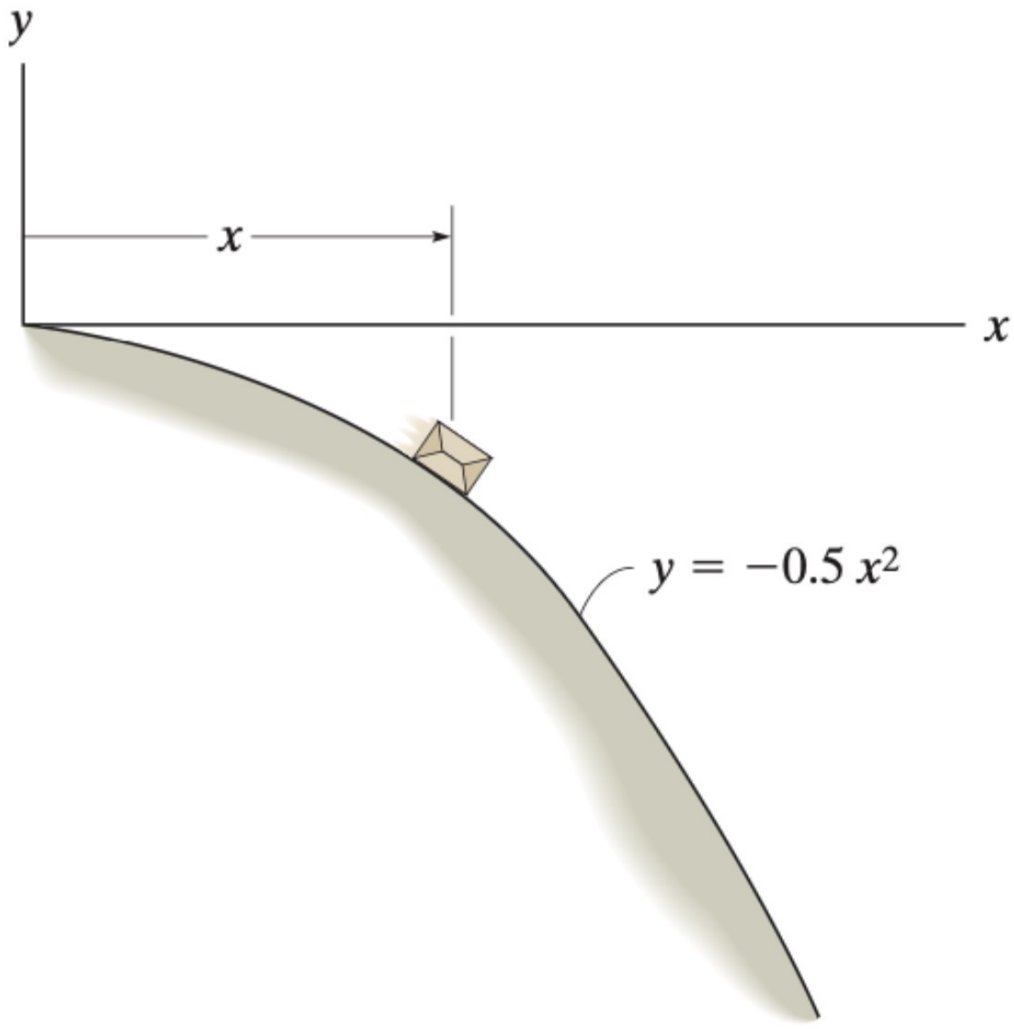

Prob. 13–75

F14–1. The spring is placed between the wall and the 10-kg block. If the block is subjected to a force of $F = 500\,\text{N}$, determine its velocity when $s = 0.5\,\text{m}$. When $s = 0$, the block is at rest and the spring is uncompressed. The contact surface is smooth.

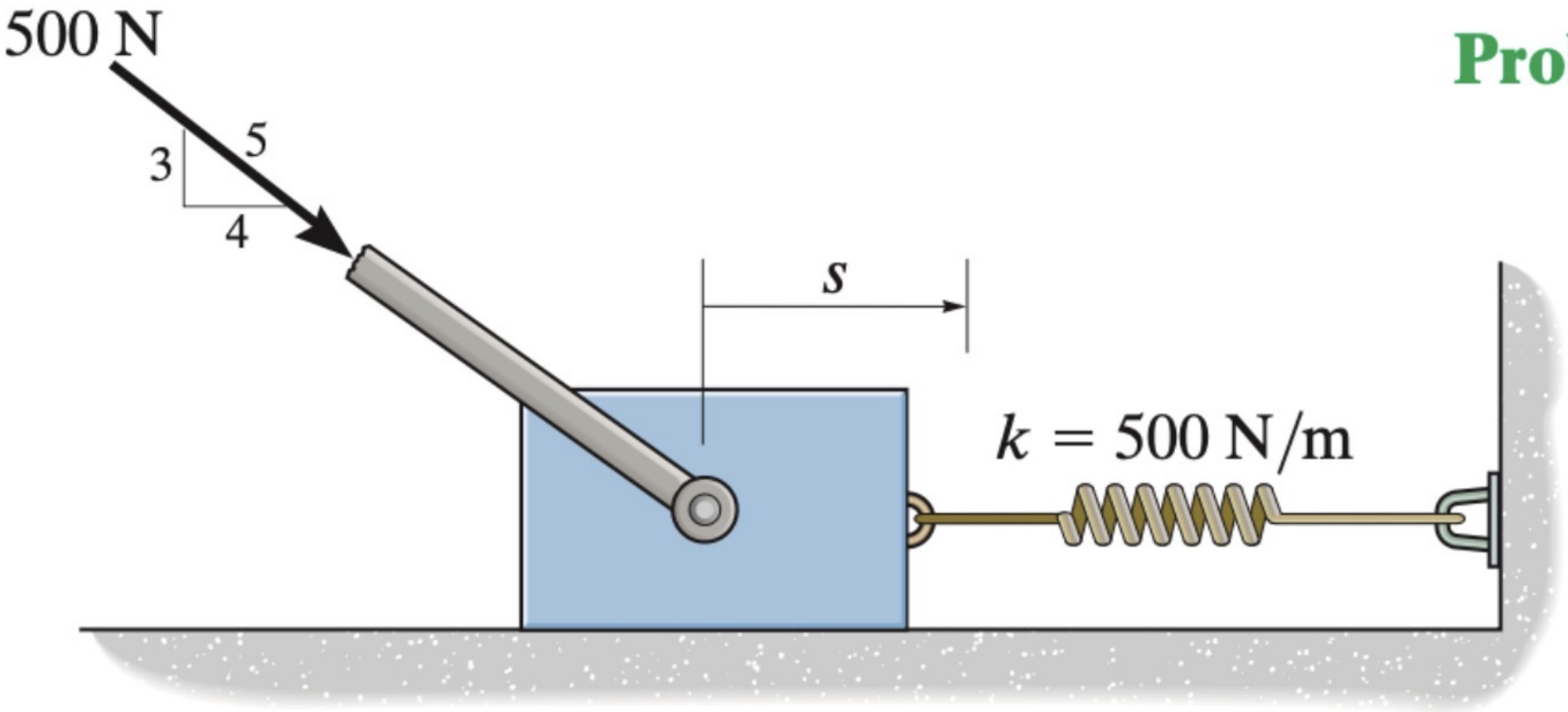

Prob. F14–1

14–10. The force **F**, acting in a constant direction on the 20-kg block, has a magnitude which varies with the position s of the block. Determine how far the block must slide before its velocity becomes 15 m/s. When $s = 0$ the block is moving to the right at $v = 6$ m/s. The coefficient of kinetic friction between the block and surface is $\mu_k = 0.3$.

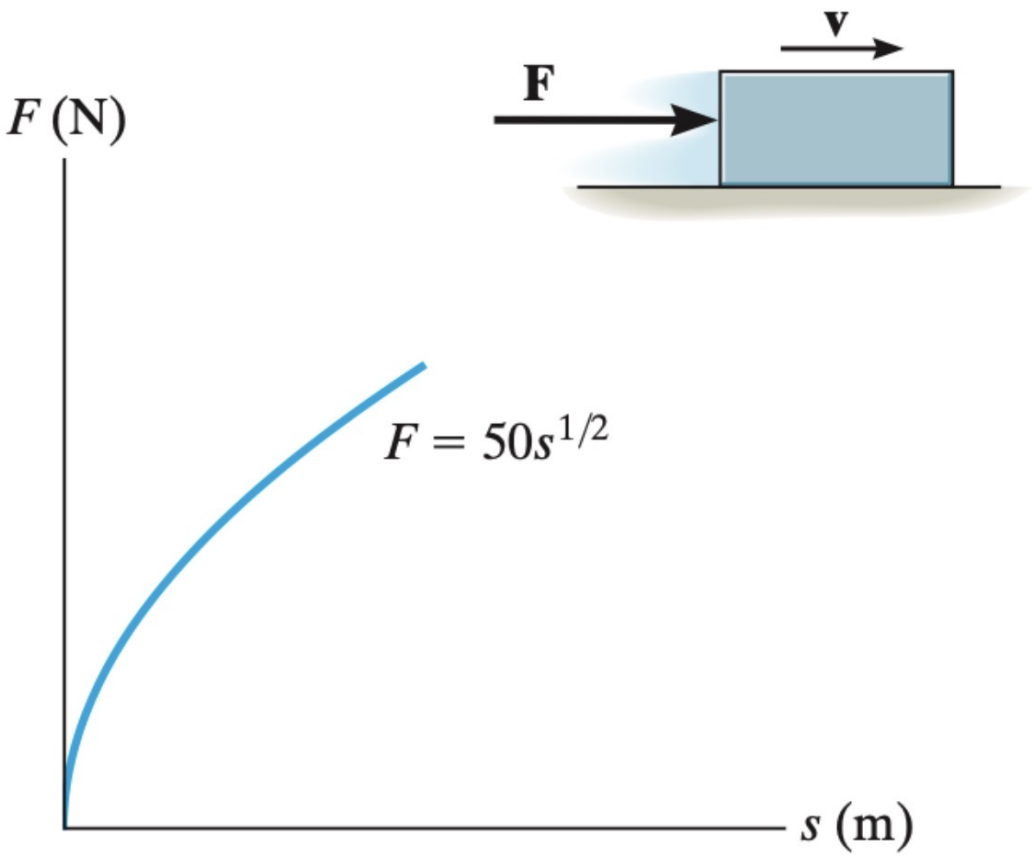

Prob. 14–10

14–23. The 8-kg block is moving with an initial speed of 5 m/s. If the coefficient of kinetic friction between the block and plane is $\mu_k = 0.25$, determine the compression in the spring when the block momentarily stops.

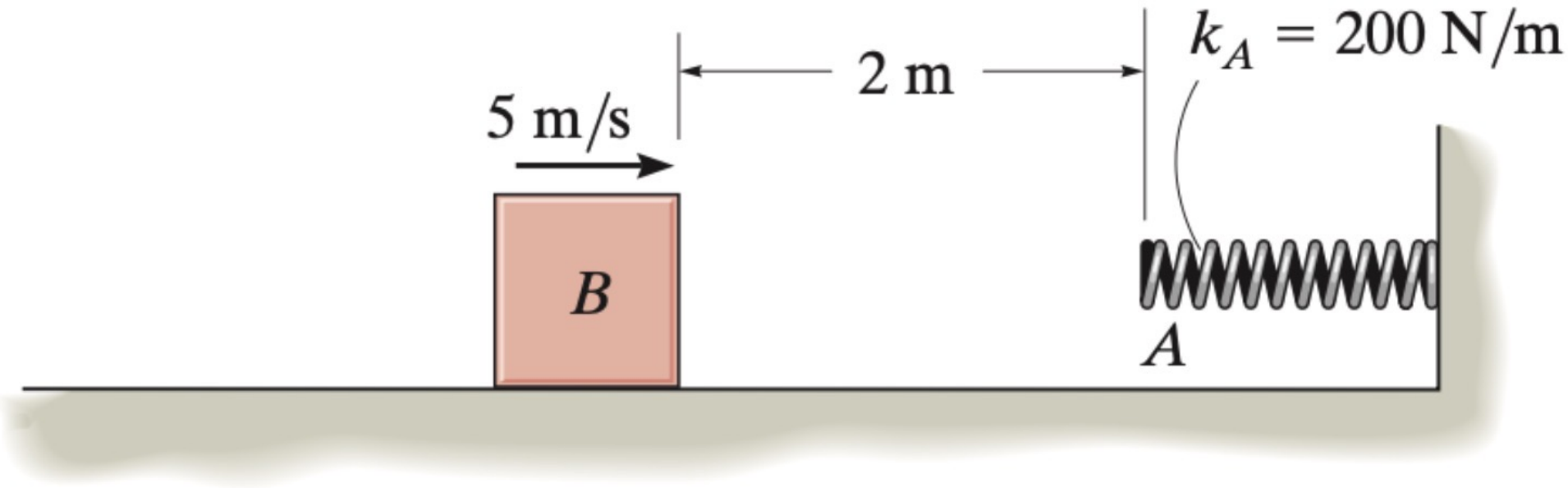

Prob. 14–23

14–31. Marbles having a mass of 5 g are dropped from rest at A through the smooth glass tube and accumulate in the can at C. Determine the placement R of the can from the end of the tube and the speed at which the marbles fall into the can. Neglect the size of the can.

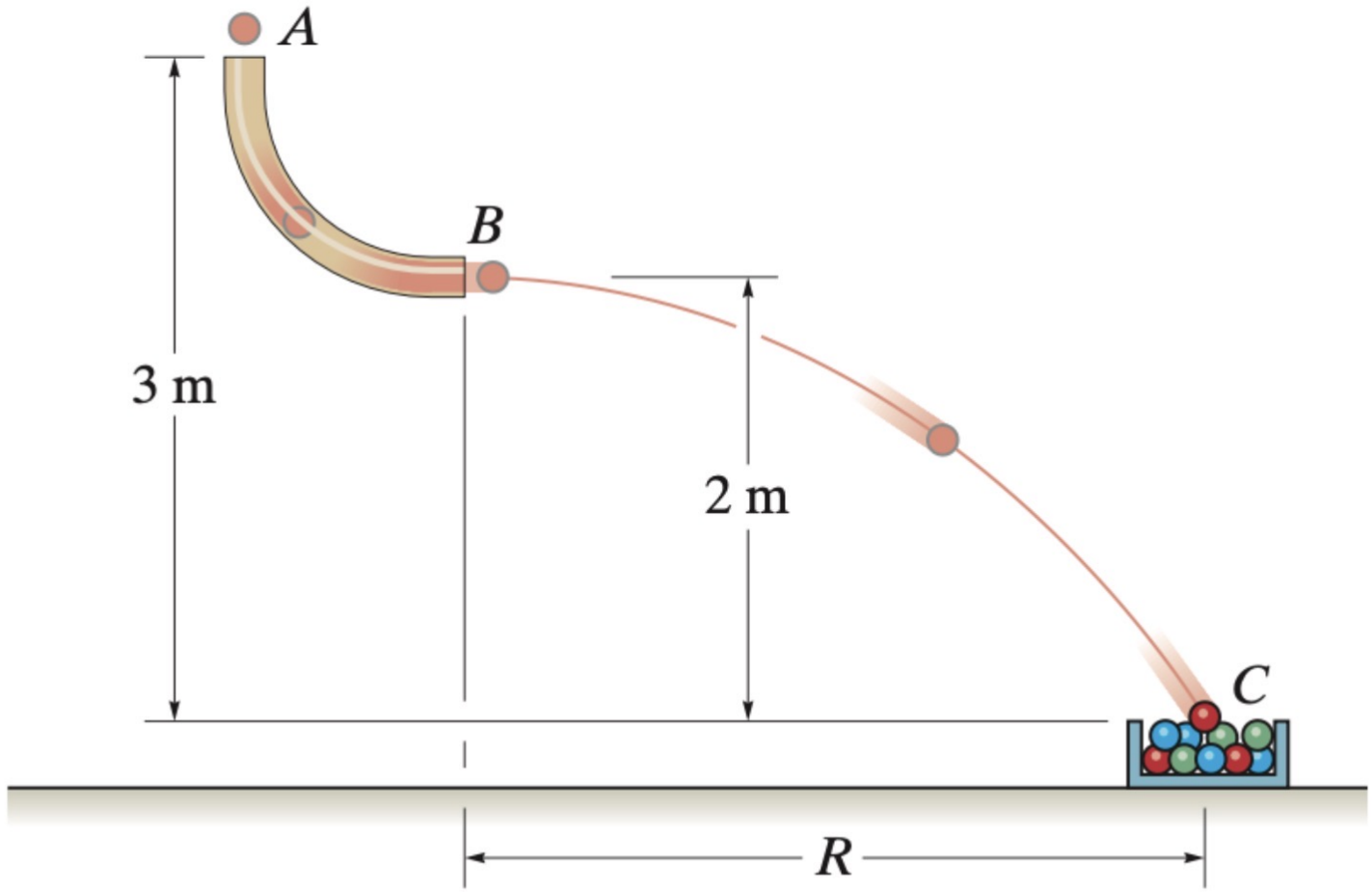

Prob. 14–31