Suggested Problems

Statics

بالنسبة للحلول
بتقدروا تحطوا السؤال
على google AI
بعطيكم الحل الكامل
إن شاء الله ^^

F4–4. Determine the moment of the force about point O. Neglect the thickness of the member.

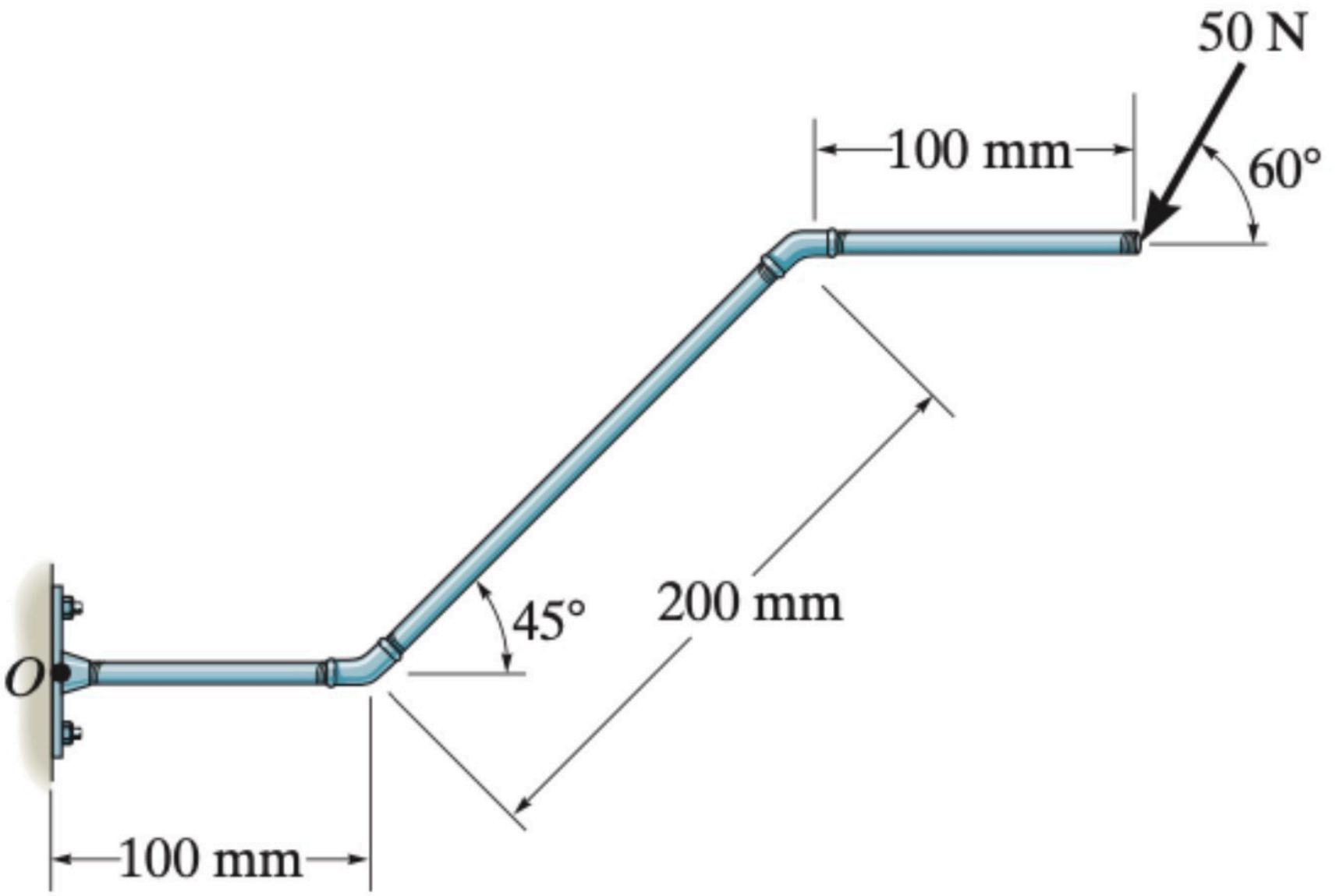

Prob. F4–4

F4–36. Replace the loading shown by an equivalent single resultant force and specify the x and y coordinates of its line of action.

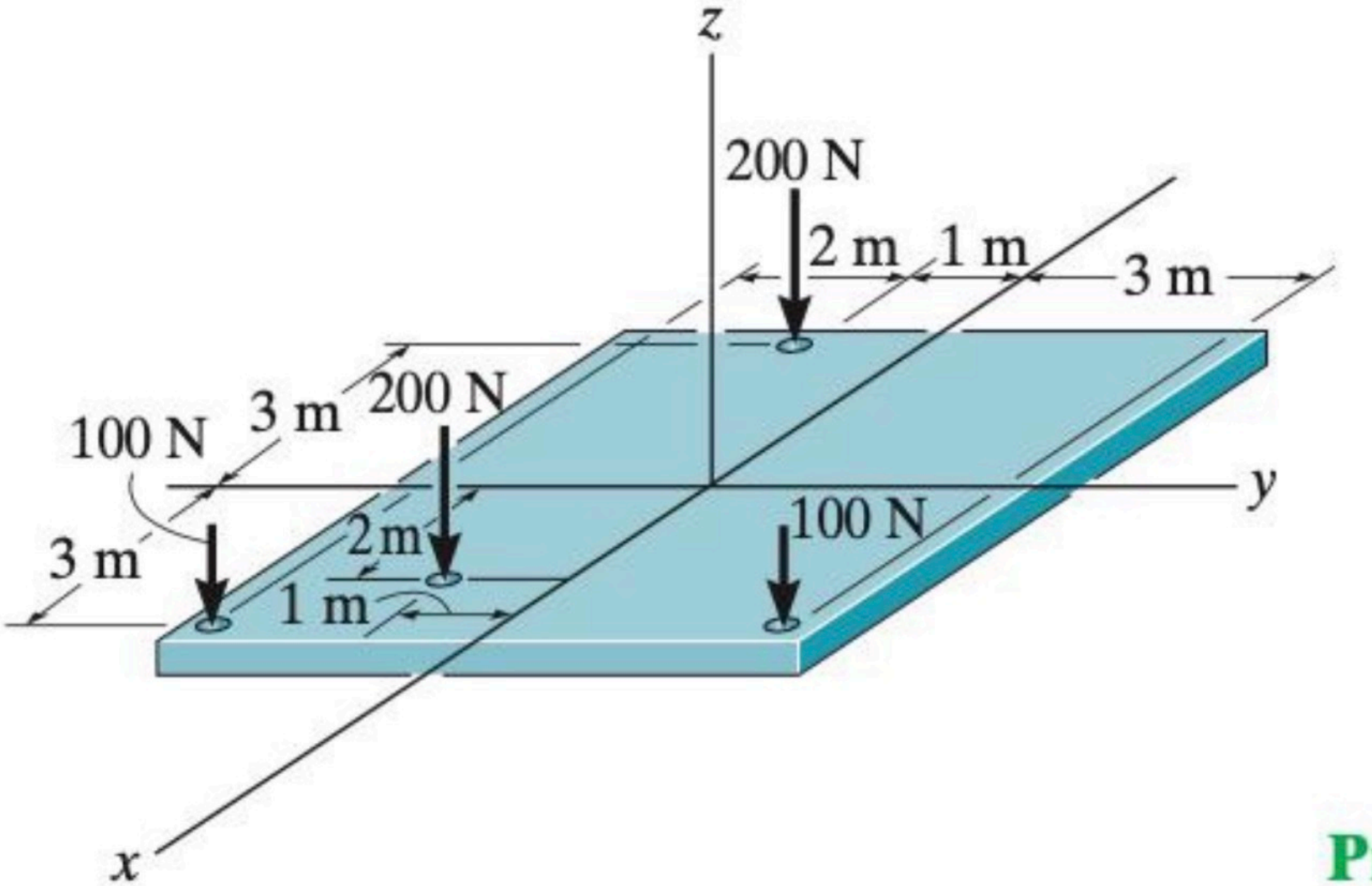

Prob. F4–36

***4–28.** Determine the moment of the force **F** about point *P*. Express the result as a Cartesian vector.

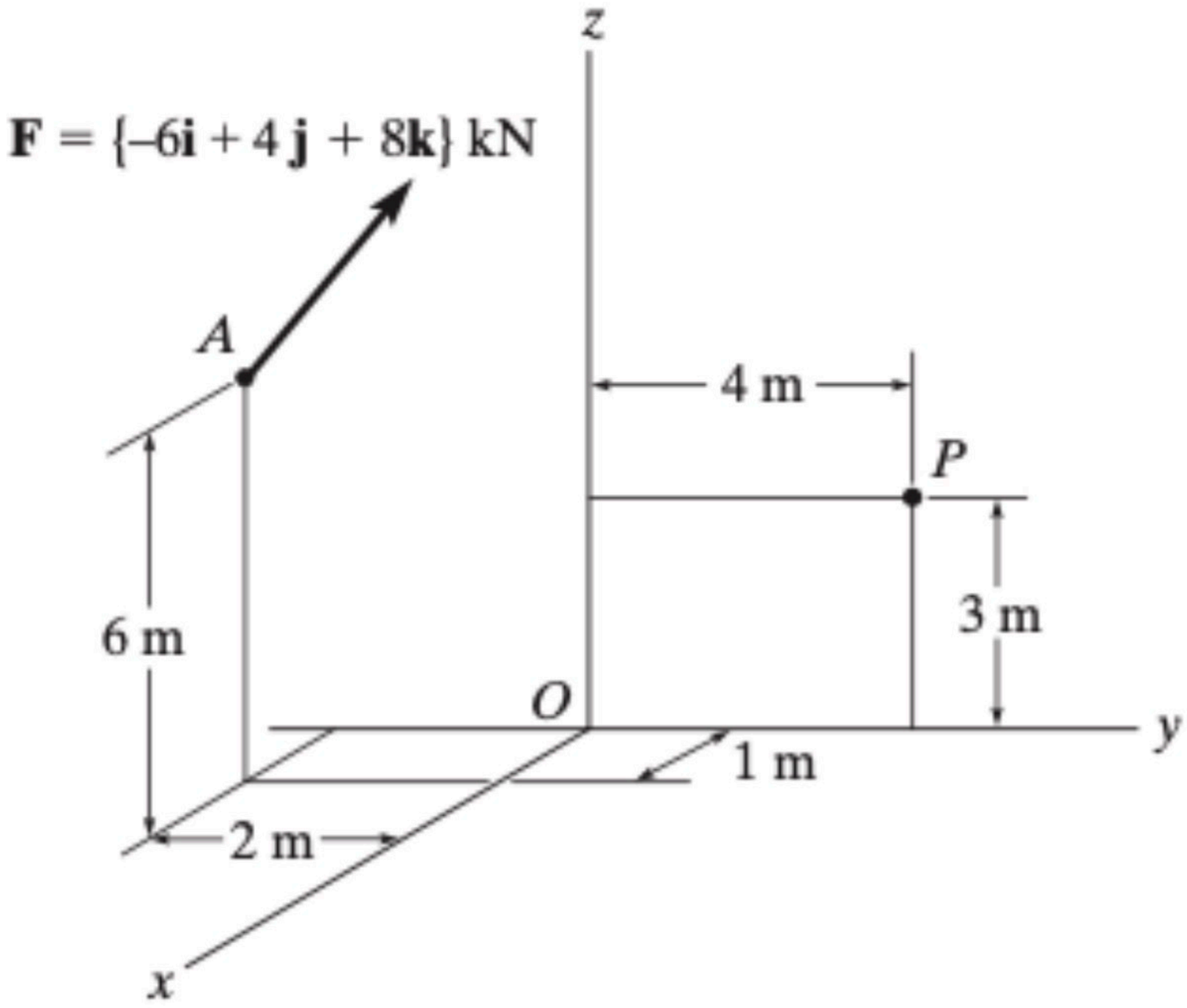

Probs. 4–27/28

*4–44. The pipe assembly is subjected to the 80-N force. Determine the moment of this force about point B.

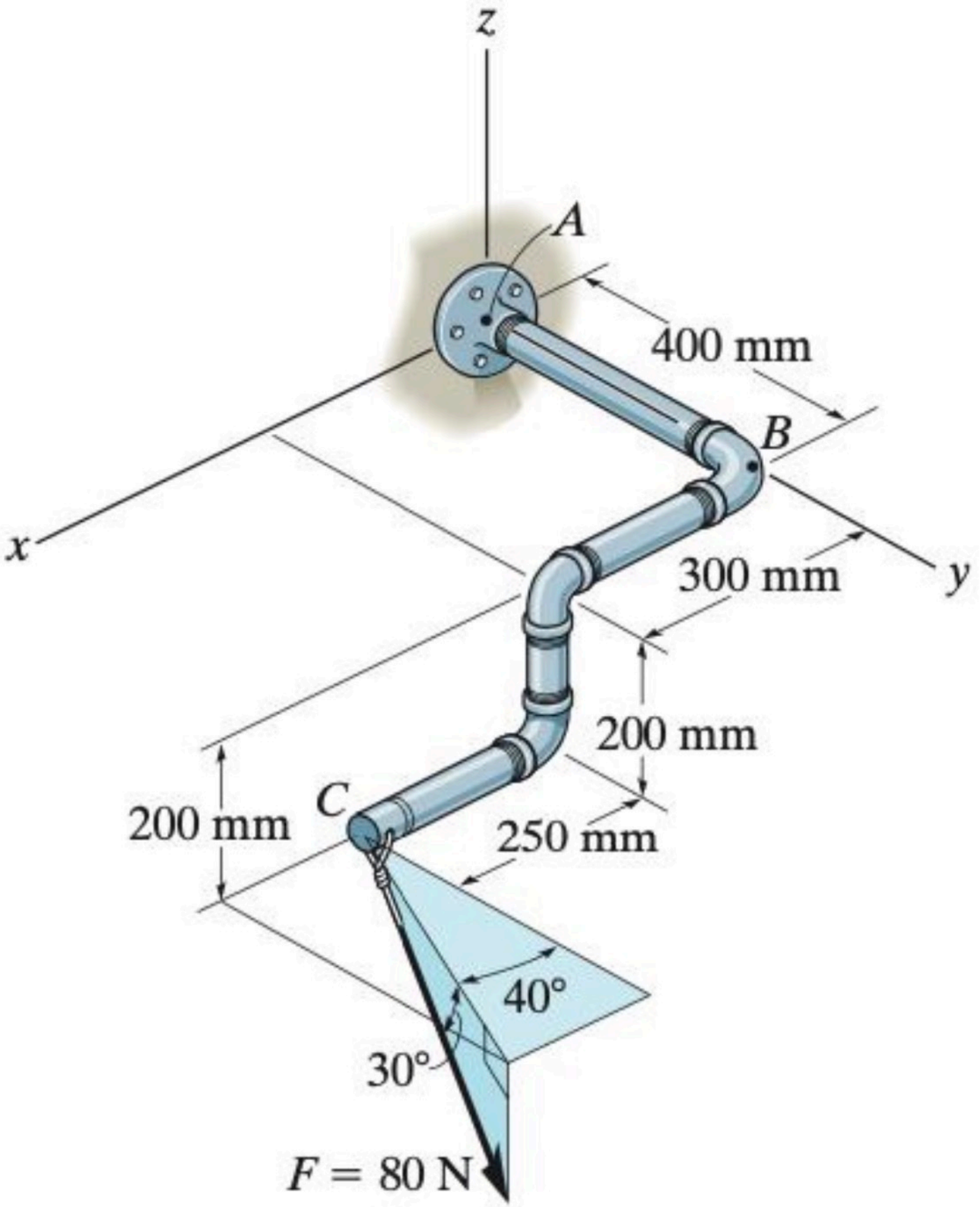

Probs. 4–43/44

4–73. The ends of the triangular plate are subjected to three couples. Determine the magnitude of the force **F** so that the resultant couple moment is 400 N · m clockwise.

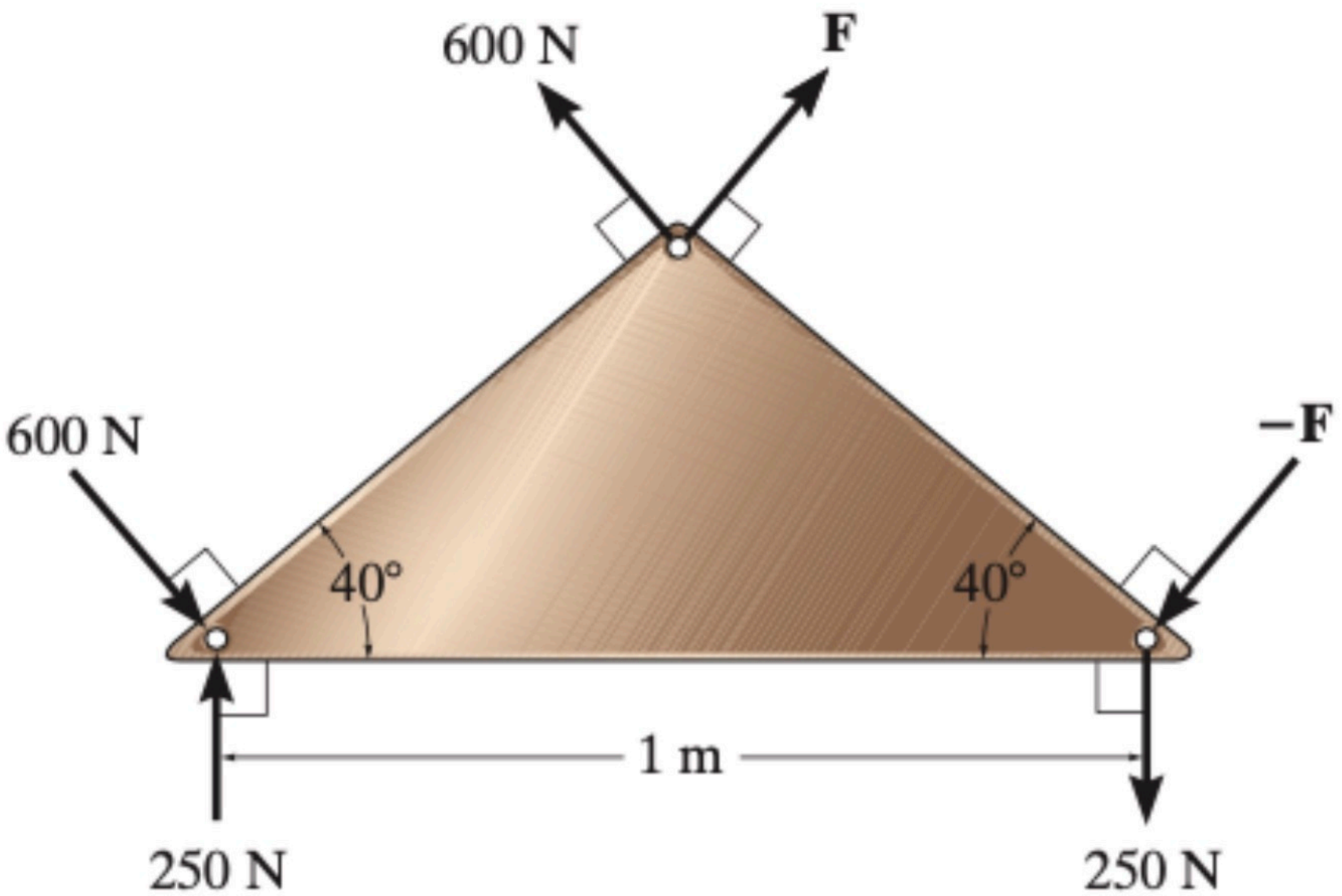

Prob. 4–73

***4–100.** Replace the force system acting on the beam by an equivalent force and couple moment at point B.

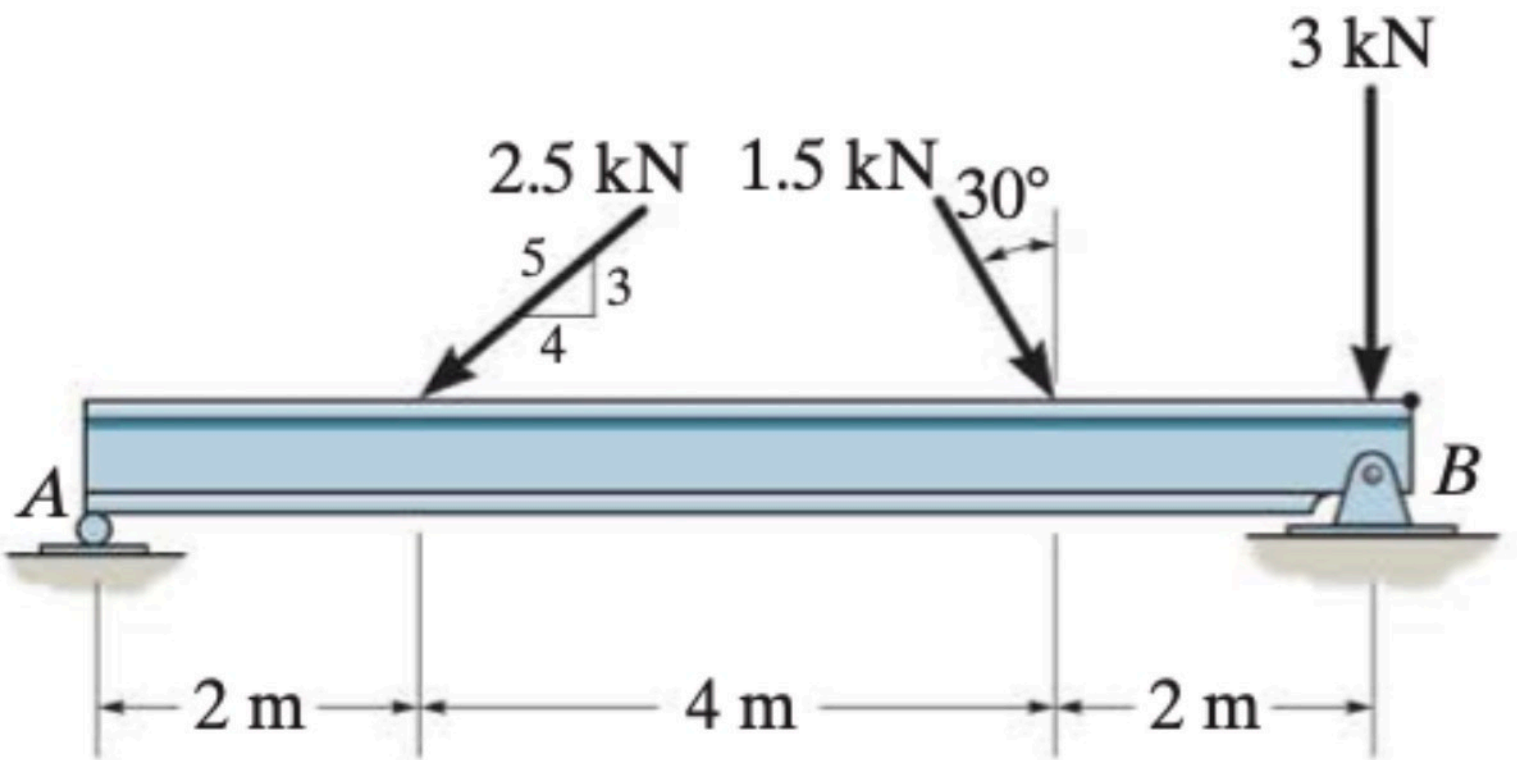

Probs. 4–99/100

4–147. Determine the length b of the triangular load and its position a on the beam such that the equivalent resultant force is zero and the resultant couple moment is 8 kN · m clockwise.

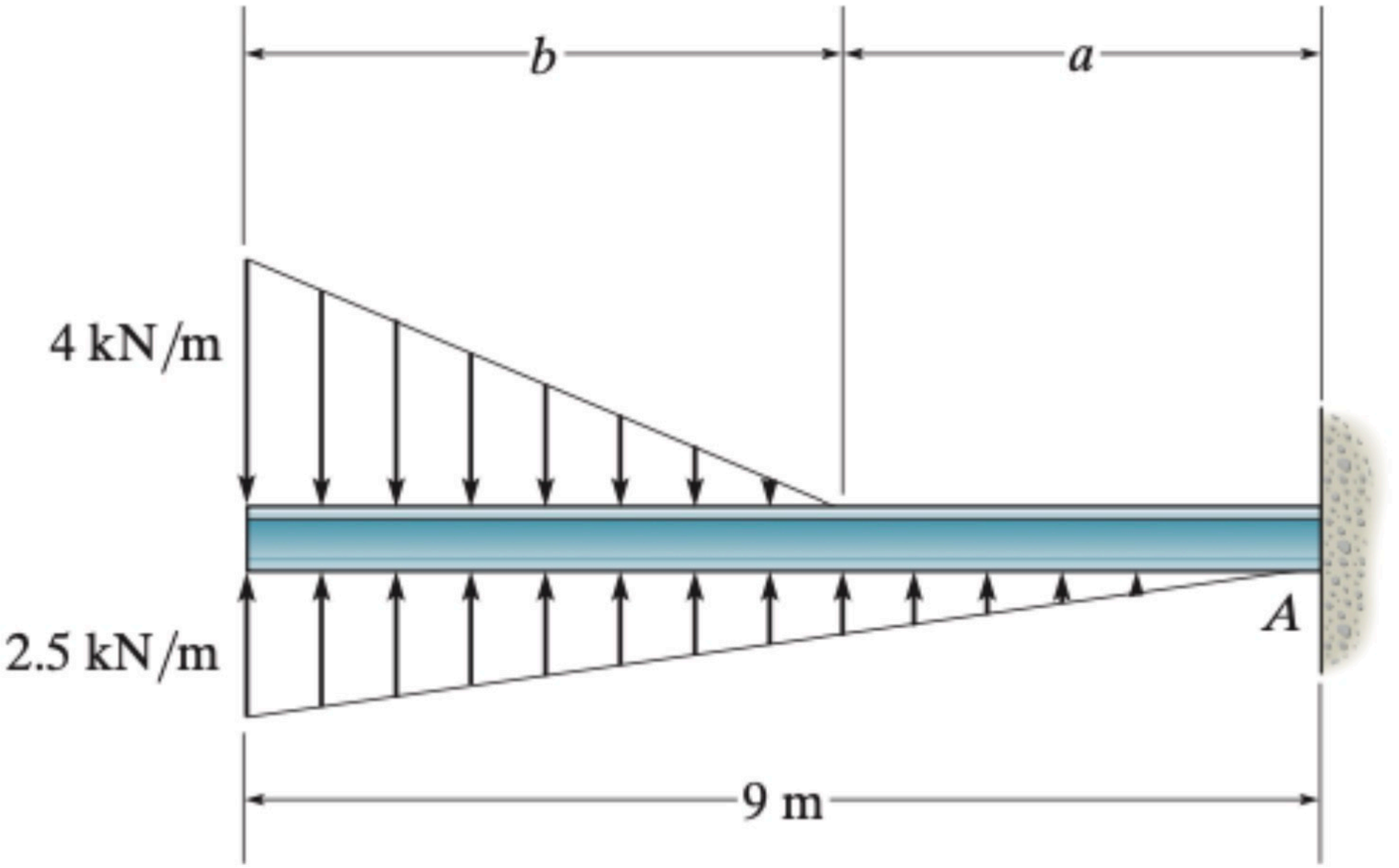

Prob. 4–147

F5–4. Determine the components of reaction at the fixed support A. Neglect the thickness of the beam.

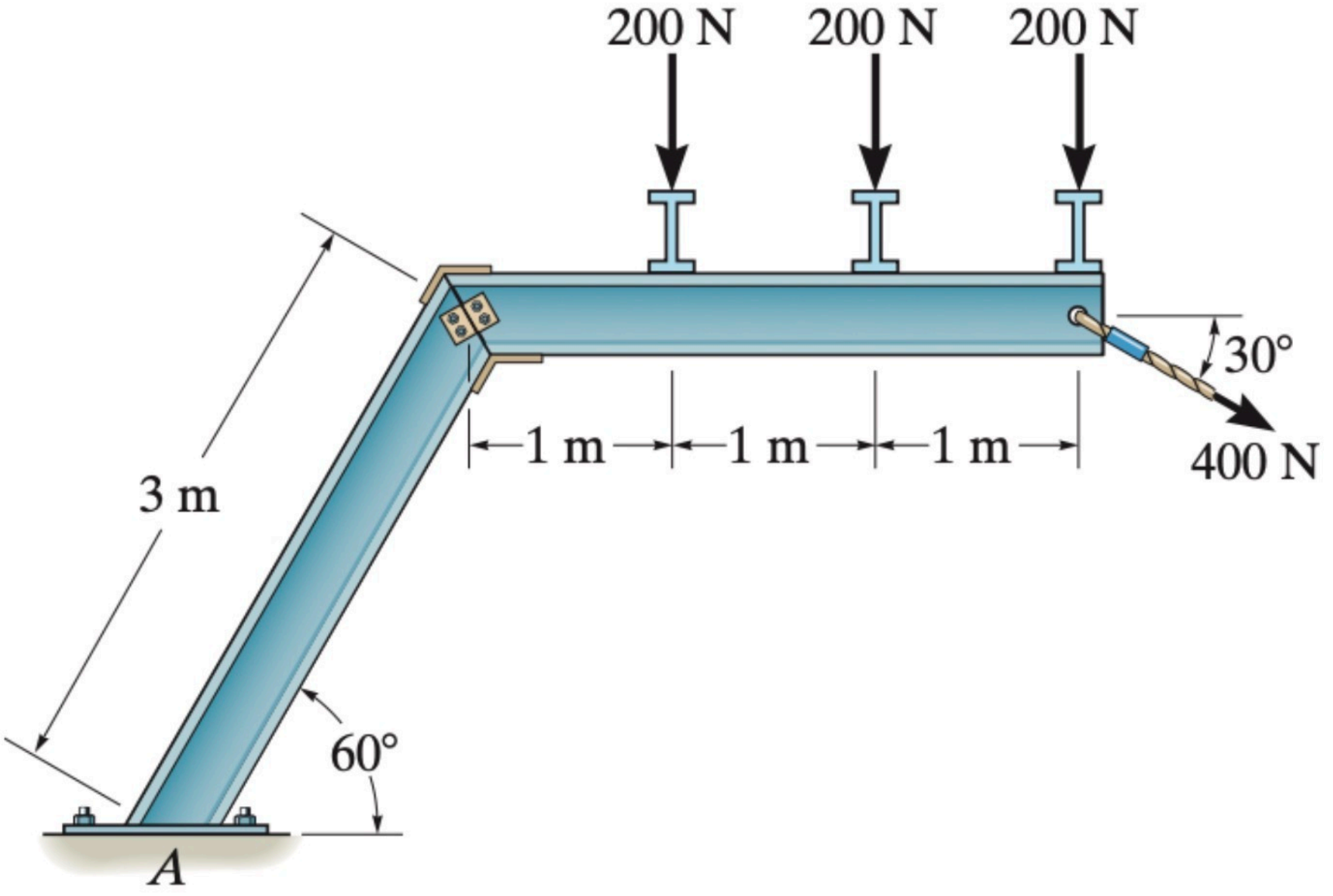

Prob. F5–4

5–11. Determine the reactions at the supports.

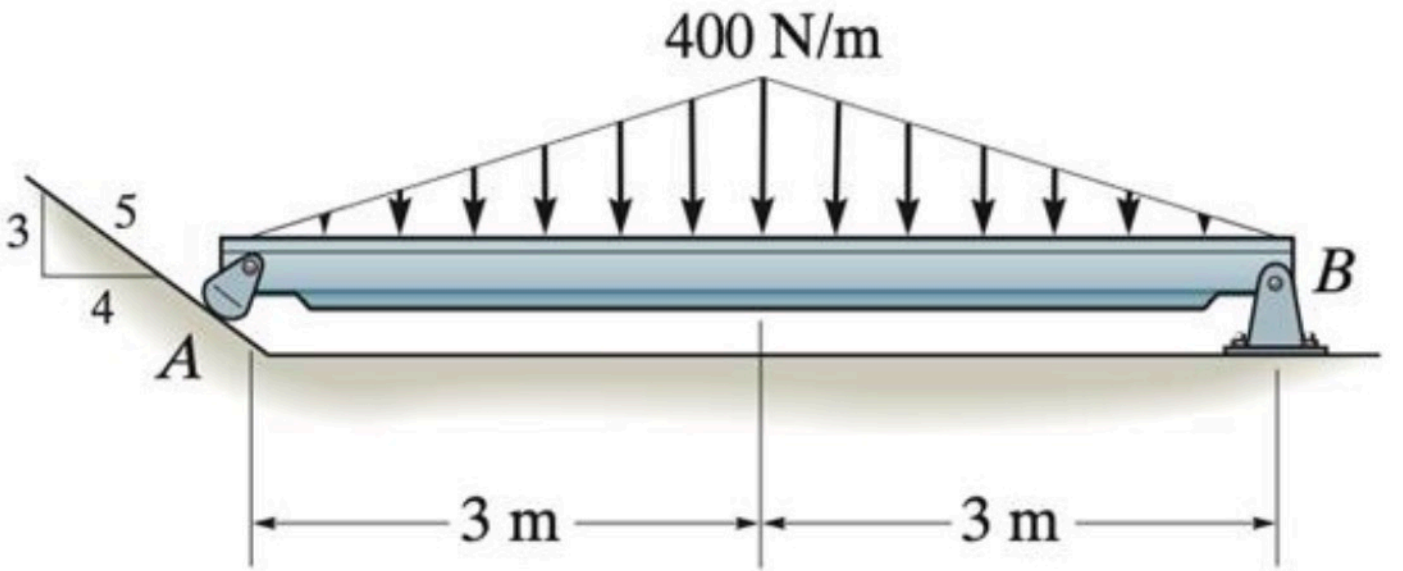

Prob. 5–11

5–22. If the intensity of the distributed load acting on the beam is $w = 3$ kN/m, determine the reactions at the roller A and pin B.

5–23. If the roller at A and the pin at B can support a load up to 4 kN and 8 kN, respectively, determine the maximum intensity of the distributed load w, measured in kN/m, so that failure of the supports does not occur.

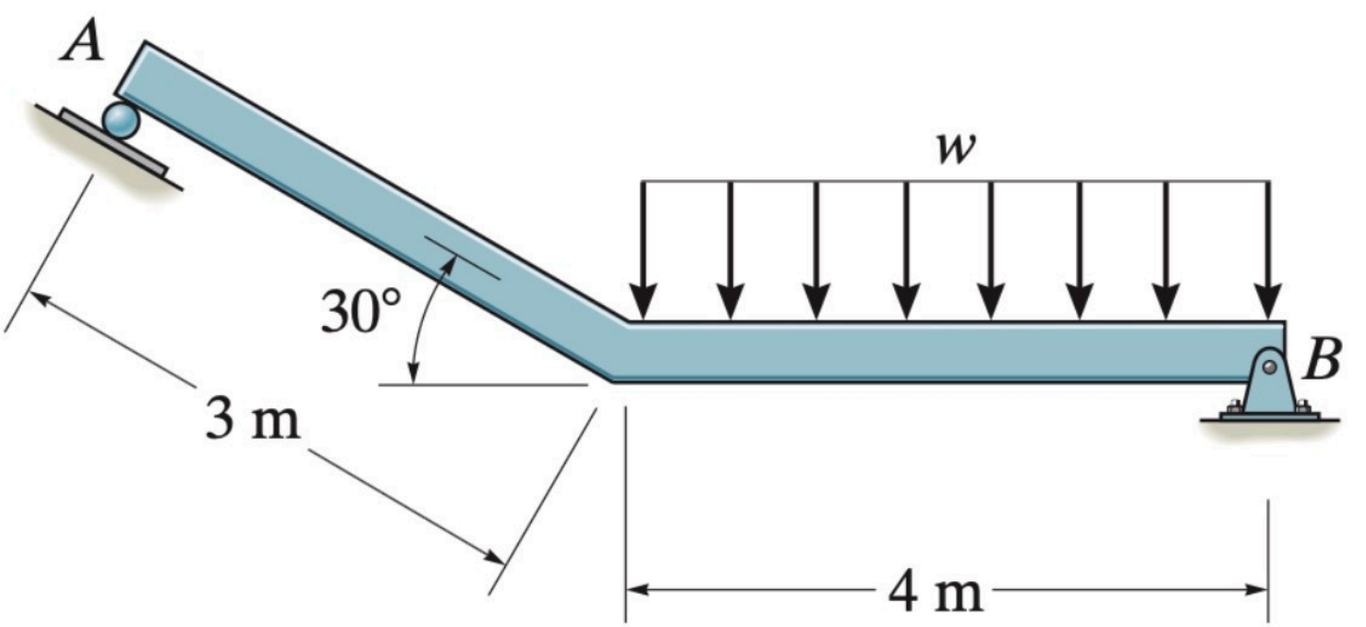

Probs. 5–22/23

6–2. Determine the force in each member of the truss and state if the members are in tension or compression. Set $P_1 = 45$ kN, $P_2 = 30$ kN.

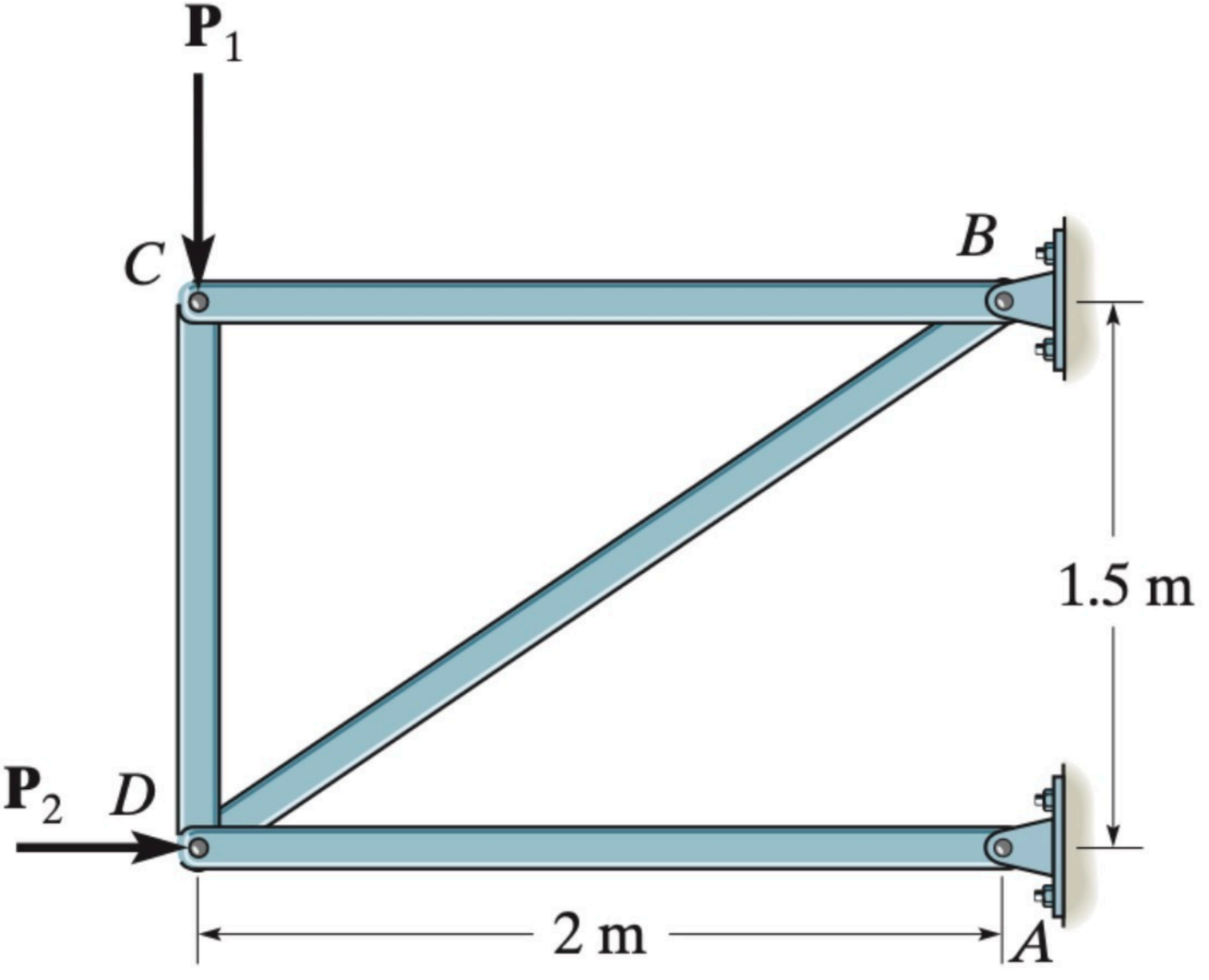

Probs. 6–1/2

***6–8.** Determine the force in each member of the truss and state if the members are in tension or compression.

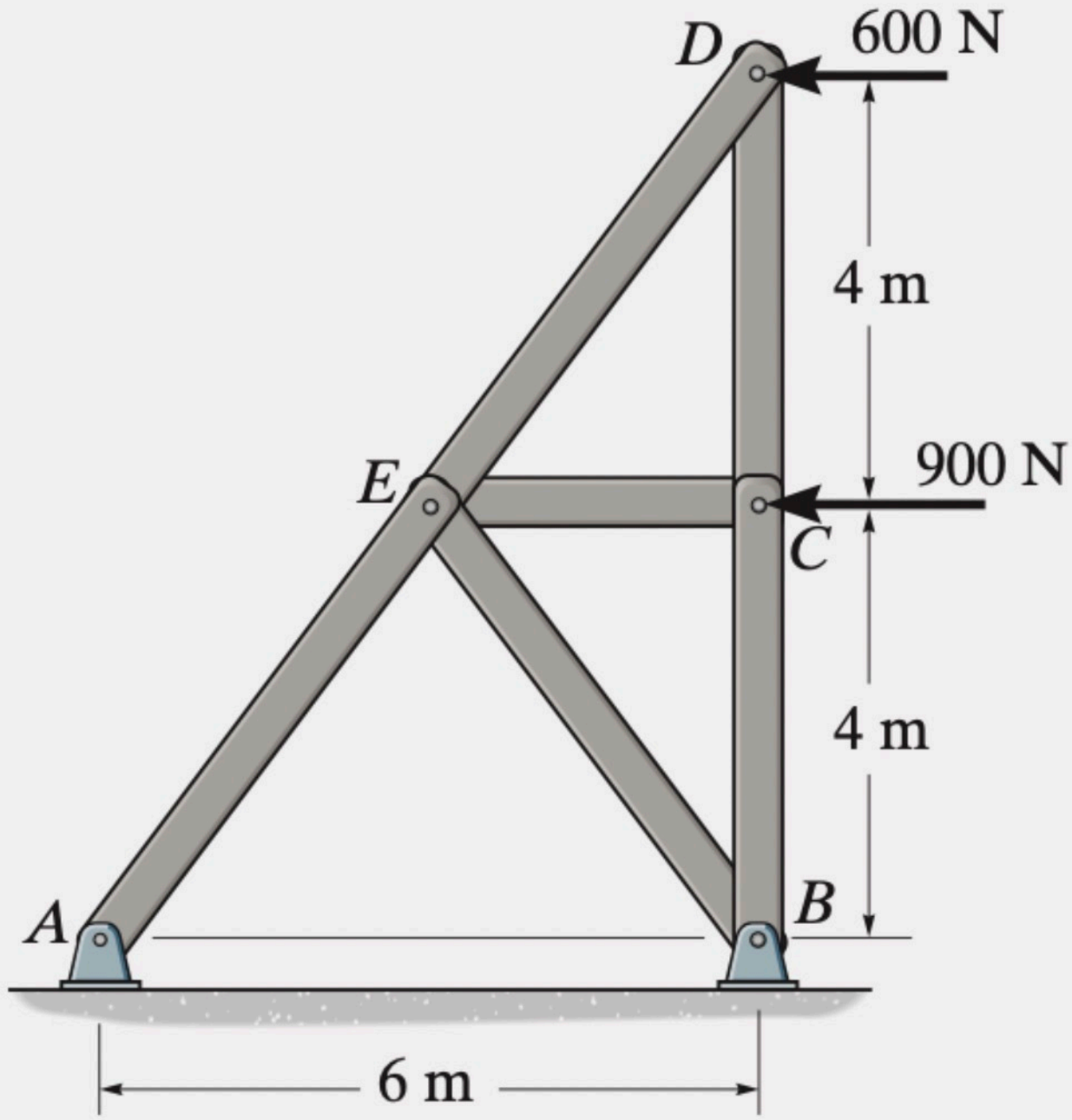

Prob. 6–8

6–41. Determine the force developed in members *FE*, *EB*, and *BC* of the truss and state if these members are in tension or compression.

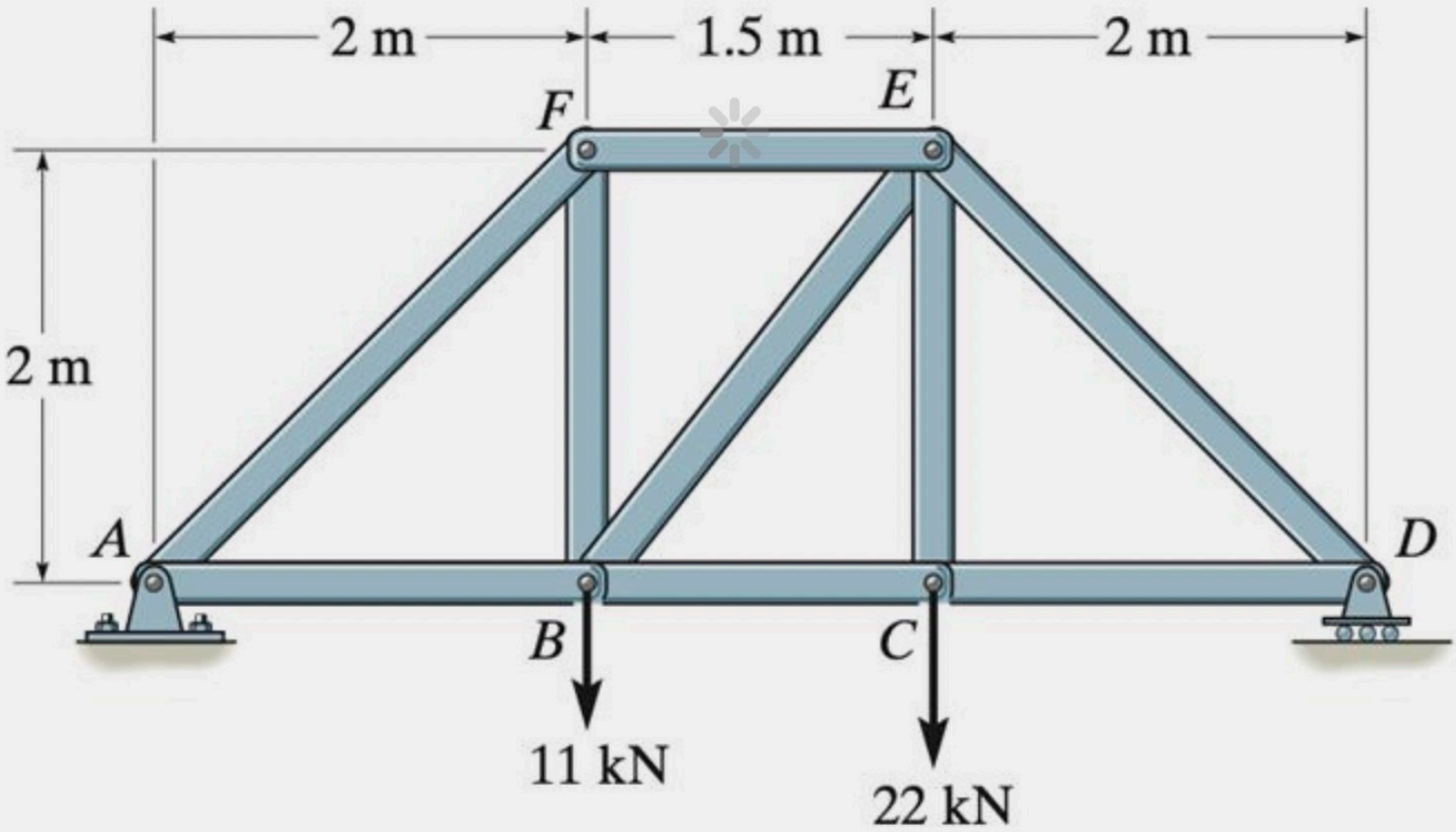

Prob. 6–41

7–45. Draw the shear and moment diagrams for the shaft (a) in terms of the parameters shown; (b) set $P = 9\,\text{kN}$, $a = 2\,\text{m}$, $L = 6\,\text{m}$. There is a thrust bearing at A and a journal bearing at B.

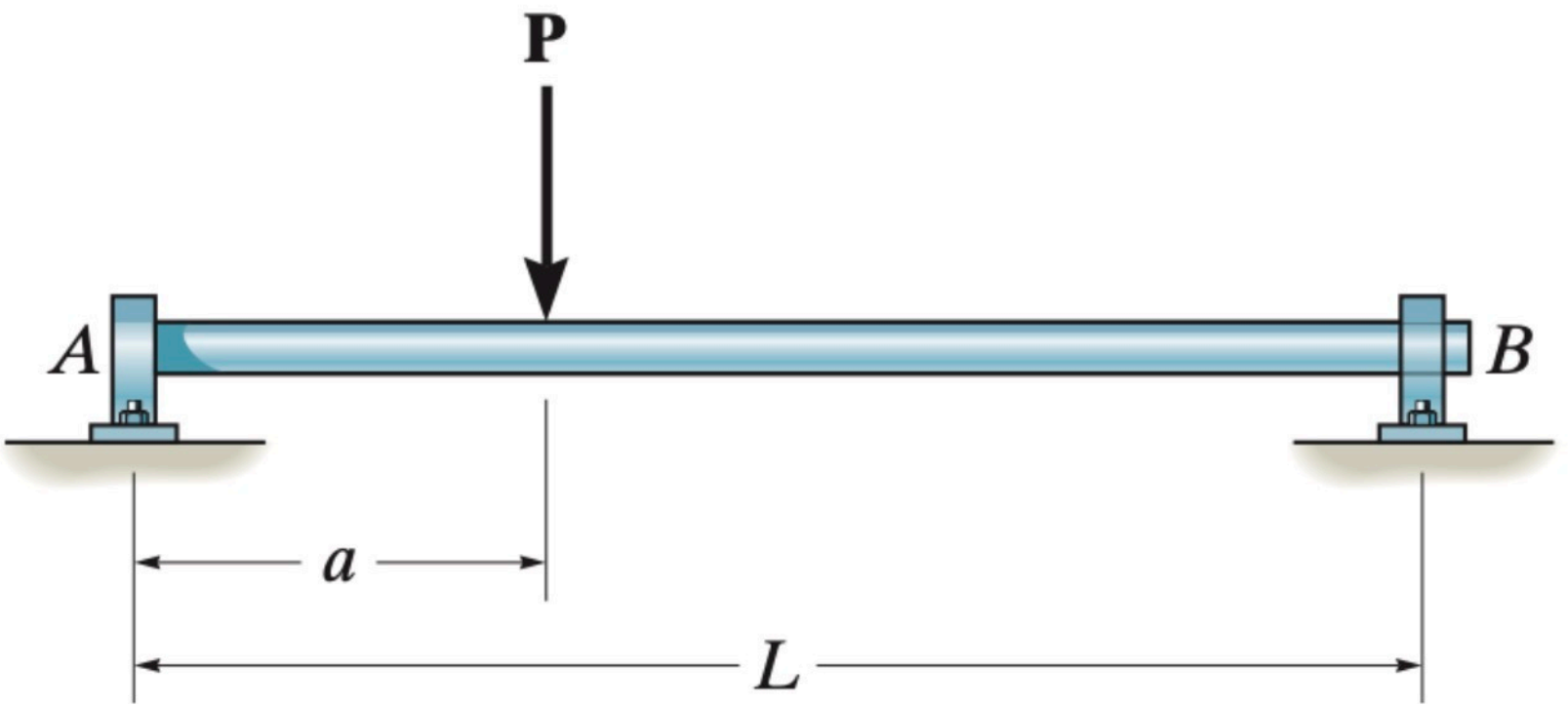

Prob. 7–45

7–65. Draw the shear and moment diagrams for the beam.

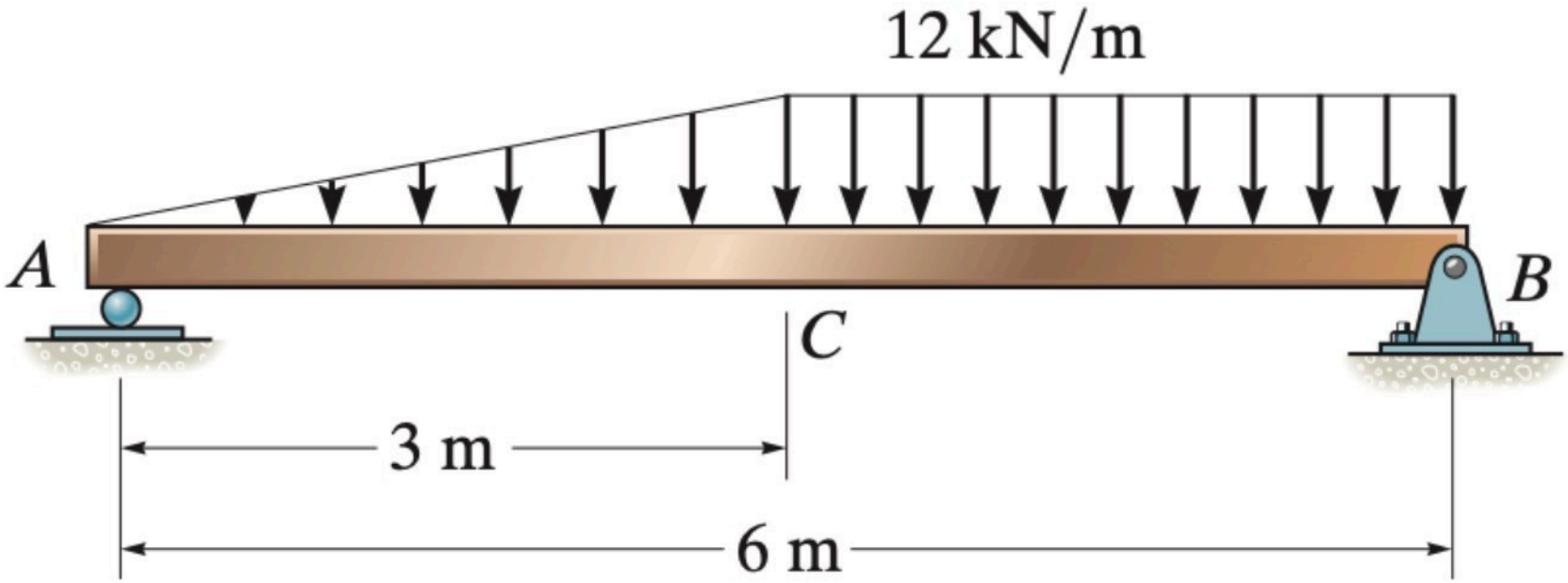

Prob. 7–65

*9–60. Locate the centroid $\bar{y}$ for the beam's cross-sectional area.

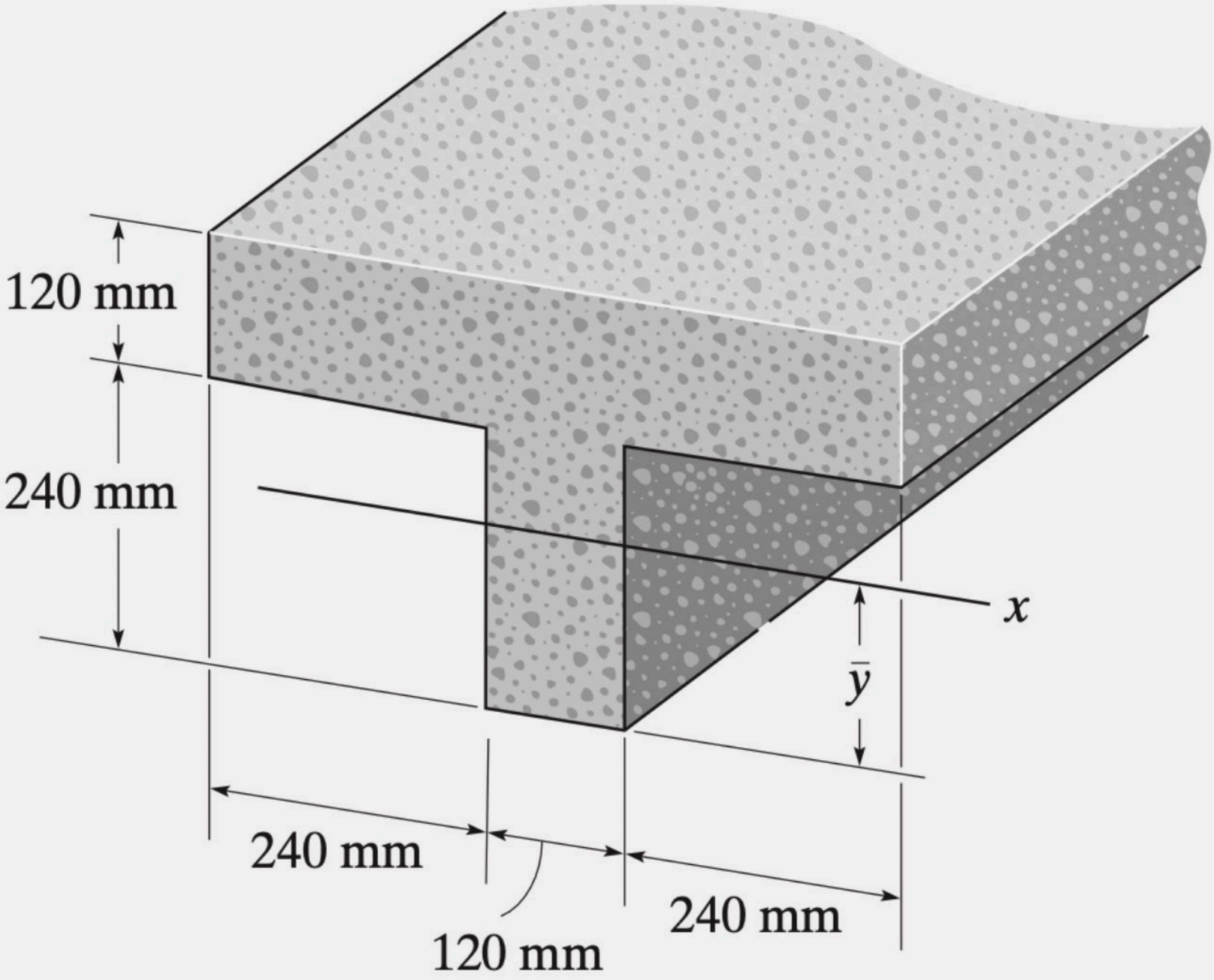

Prob. 9–60

9–13. Locate the centroid $\bar{x}$ of the area.

9–14. Locate the centroid $\bar{y}$ of the area.

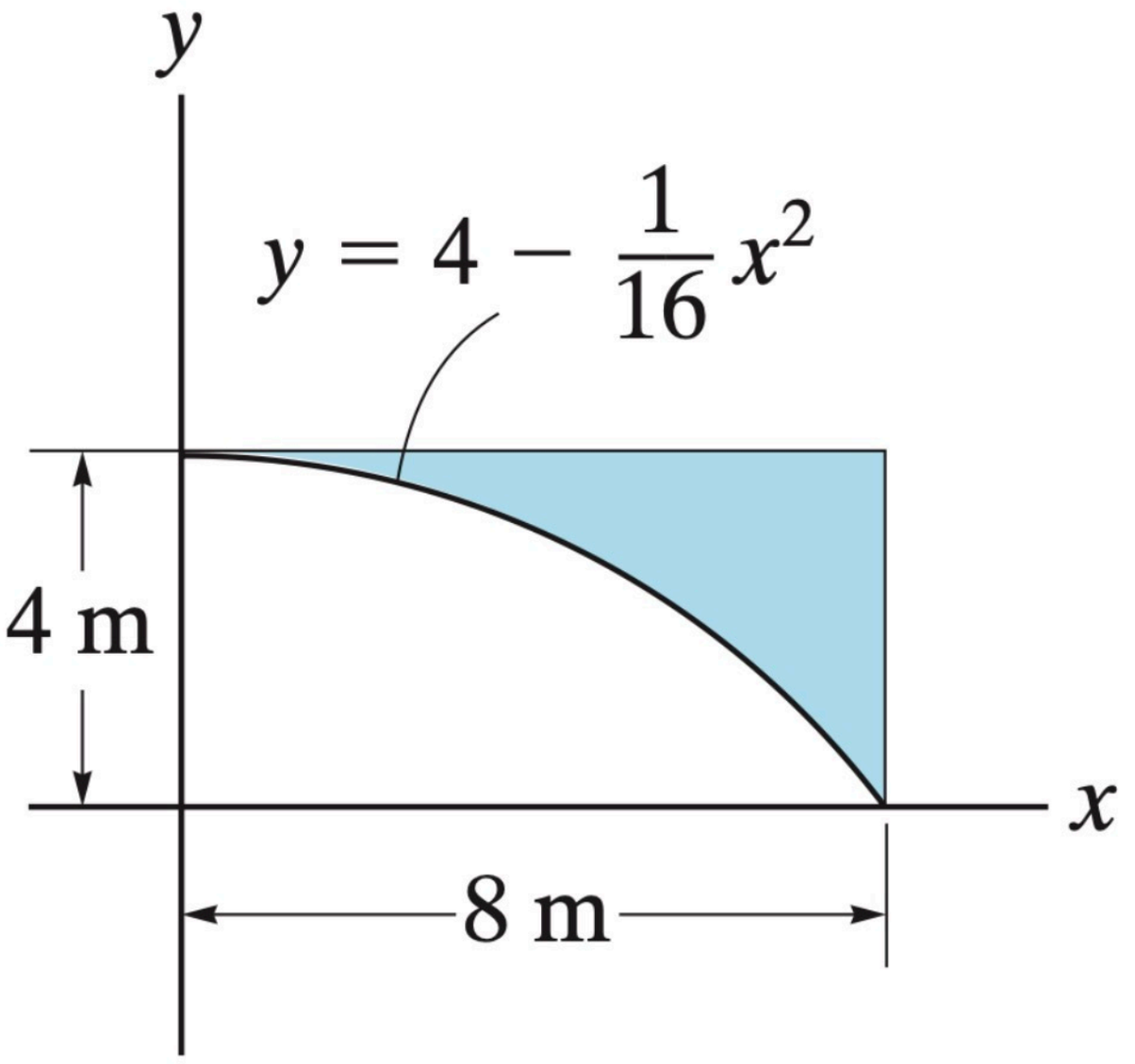

Probs. 9–13/14

10–29. Determine $\bar{y}$, which locates the centroidal axis x' for the cross-sectional area of the T-beam, and then find the moments of inertia $I_{x'}$ and $I_{y'}$.

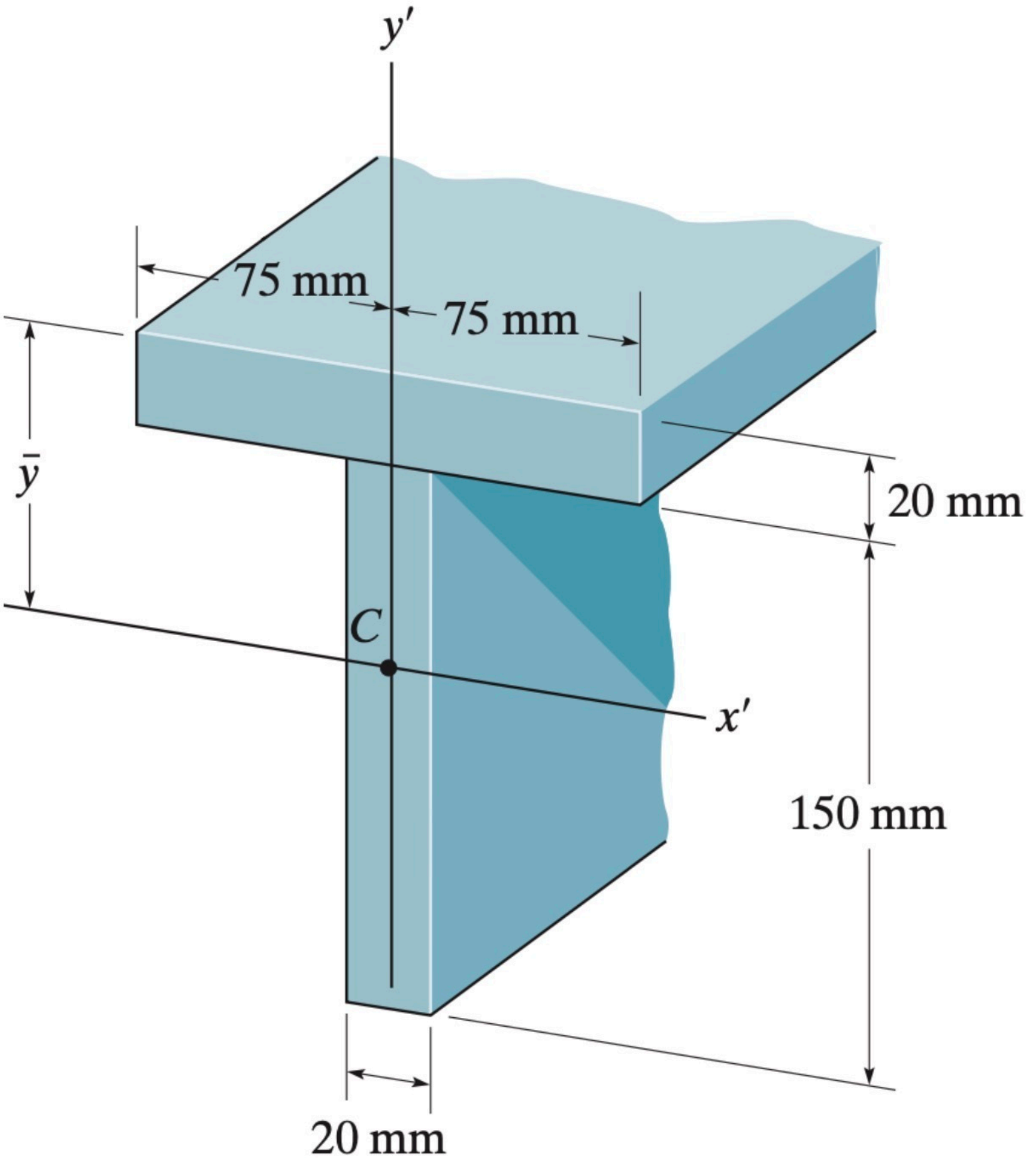

Prob. 10–29

10–7. Determine the moment of inertia for the shaded area about the x axis.

***10–8.** Determine the moment of inertia for the shaded area about the y axis.

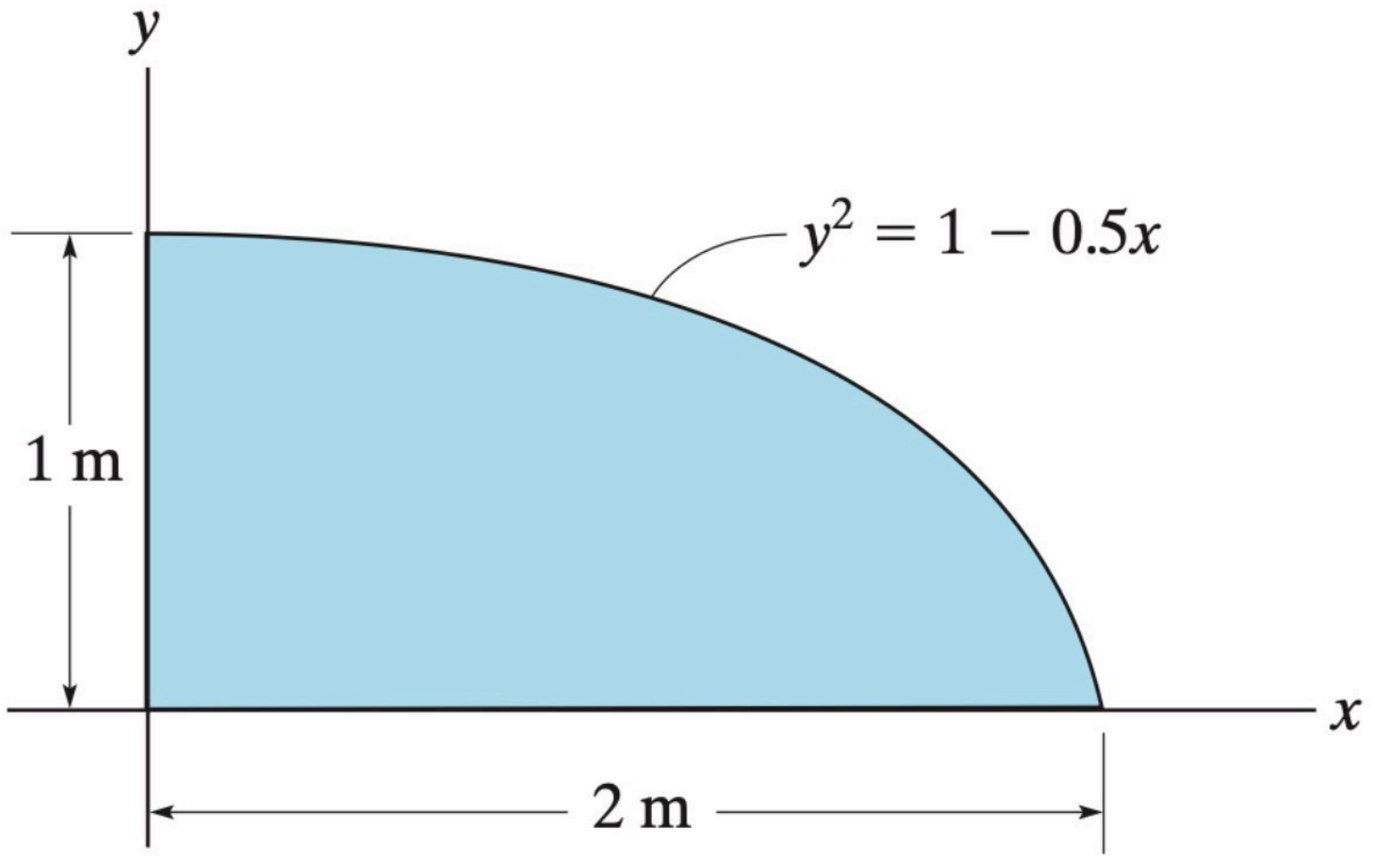

Probs. 10–7/8

10–46. Determine the moment of inertia for the shaded area about the x axis.

10–47. Determine the moment of inertia for the shaded area about the y axis.

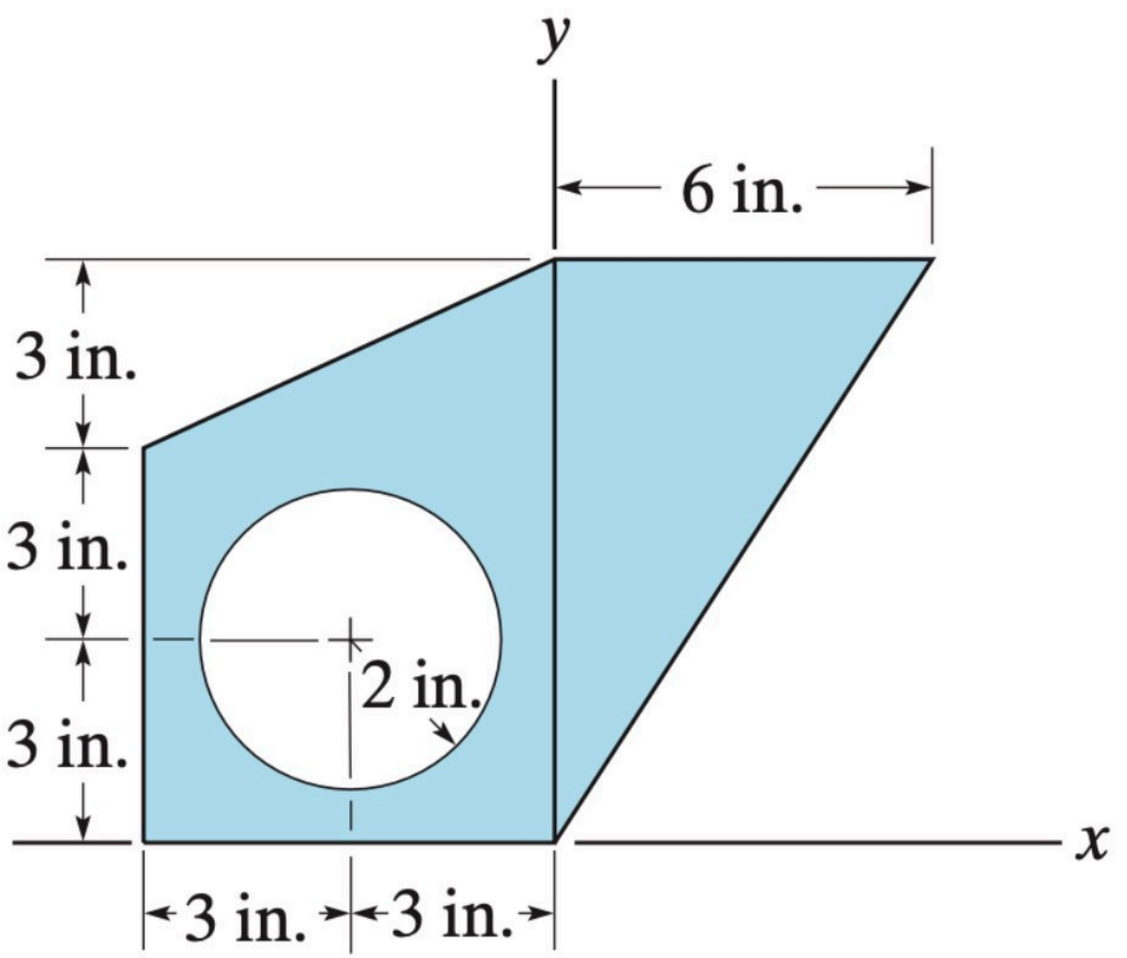

Probs. 10–46/47